Friction

© 2007 The McGraw-Hill Companies, Inc. All rights reserved.

Introduction

- In preceding chapters, it was assumed that surfaces in contact were either *frictionless* (surfaces could move freely with respect to each other) or *rough* (tangential forces prevent relative motion between surfaces).

- Actually, no perfectly frictionless surface exists. For two surfaces in contact, tangential forces, called *friction forces*, will develop if one attempts to move one relative to the other.

- However, the friction forces are limited in magnitude and will not prevent motion if sufficiently large forces are applied.

- The distinction between frictionless and rough is, therefore, a matter of degree.

- There are two types of friction: *dry* or *Coulomb friction* and *fluid friction*. Fluid friction applies to lubricated mechanisms. The present discussion is limited to dry friction between nonlubricated surfaces.

The Laws of Dry Friction. Coefficients of Friction

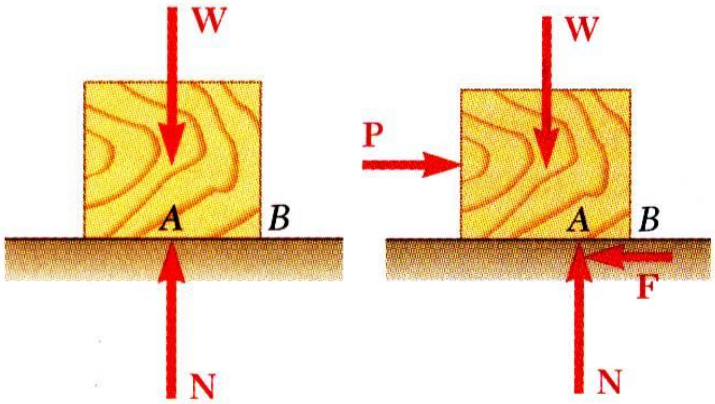

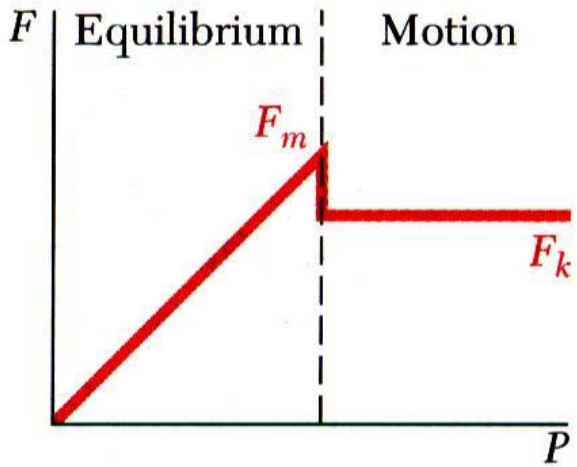

- Block of weight W placed on horizontal surface. Forces acting on block are its weight and reaction of surface N.

- Small horizontal force P applied to block. For block to remain stationary, in equilibrium, a horizontal component F of the surface reaction is required. F is a *static-friction force*.

- As P increases, the static-friction force F increases as well until it reaches a maximum value F_m.

$$F_m = \mu_s N$$

- Further increase in P causes the block to begin to move as F drops to a smaller *kinetic-friction force* F_k.

$$F_k = \mu_k N$$

The Laws of Dry Friction. Coefficients of Friction

Table 8.1. Approximate Values of Coefficient of Static Friction for Dry Surfaces

Metal on metal	0.15–0.60
Metal on wood	0.20–0.60
Metal on stone	0.30–0.70
Metal on leather	0.30–0.60
Wood on wood	0.25–0.50
Wood on leather	0.25–0.50
Stone on stone	0.40–0.70
Earth on earth	0.20–1.00
Rubber on concrete	0.60–0.90

- Maximum static-friction force:

$$F_m = \mu_s N$$

- Kinetic-friction force:

$$F_k = \mu_k N$$

$$\mu_k \cong 0.75\mu_s$$

- Maximum static-friction force and kinetic-friction force are:
  - proportional to normal force
  - dependent on type and condition of contact surfaces
  - independent of contact area

The Laws of Dry Friction. Coefficients of Friction

- Four situations can occur when a rigid body is in contact with a horizontal surface:

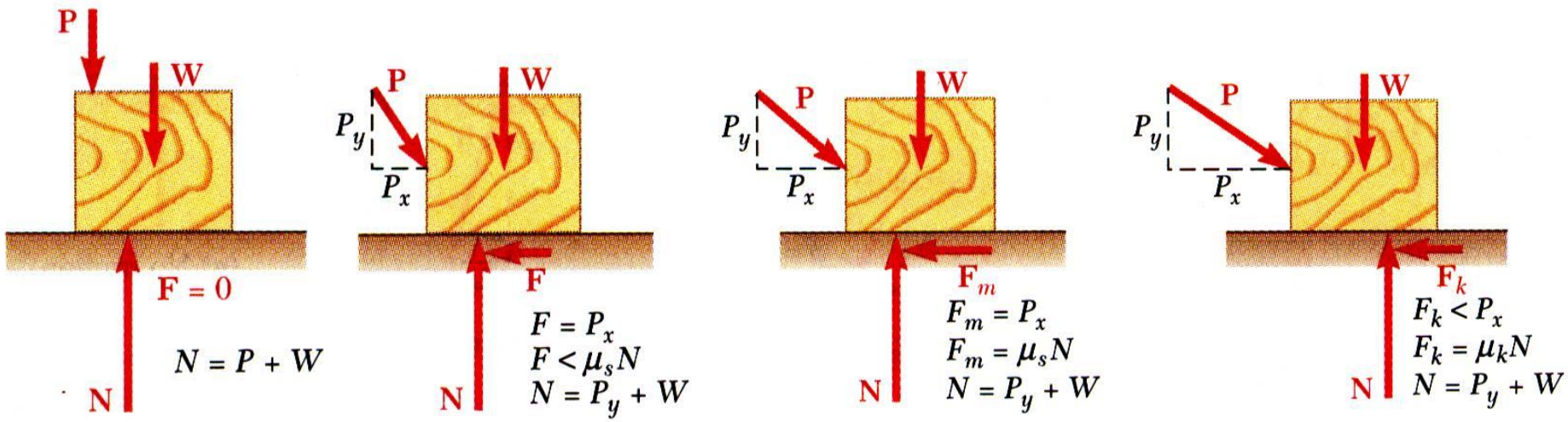

- No friction, ($P_x = 0$)
- No motion, ($P_x < F_m$)
- Motion impending, ($P_x = F_m$)
- Motion, ($P_x > F_m$)

Angles of Friction

- It is sometimes convenient to replace normal force N and friction force F by their resultant $\boldsymbol{R}$:

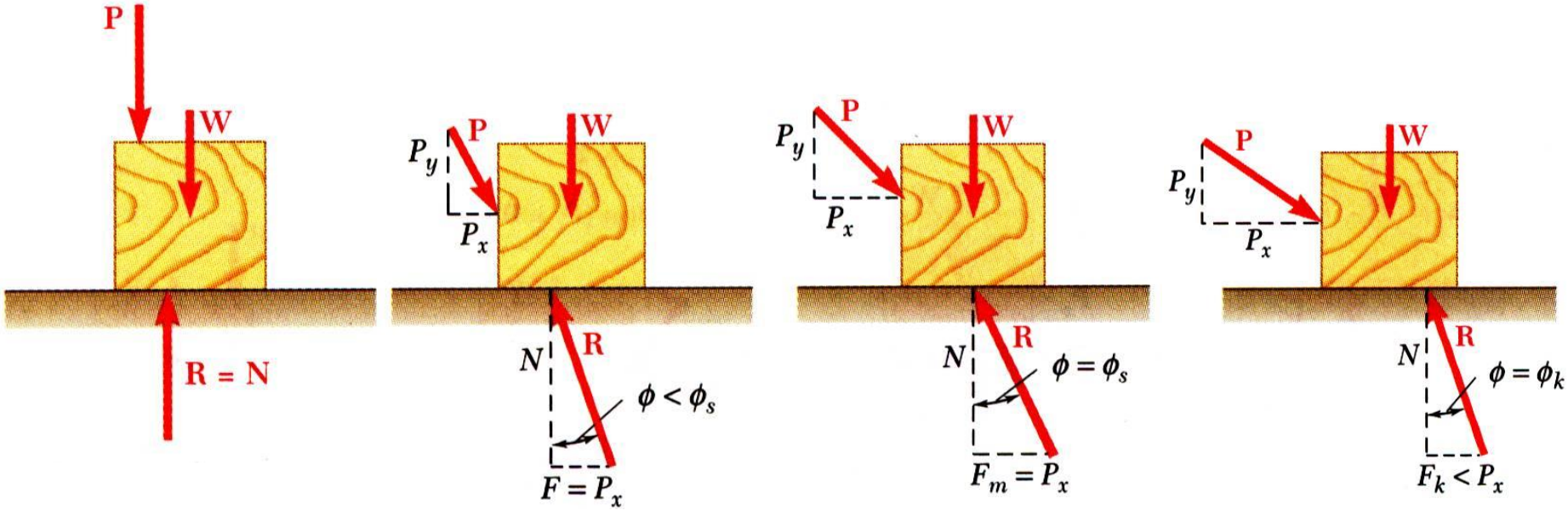

- No friction
- No motion
- Motion impending
- Motion

$$\tan\phi_s = \frac{F_m}{N} = \frac{\mu_s N}{N}$$

$$\tan\phi_s = \mu_s$$

$$\tan\phi_k = \frac{F_k}{N} = \frac{\mu_k N}{N}$$

$$\tan\phi_k = \mu_k$$

Angles of Repose

- Consider block of weight W resting on board with variable inclination angle θ.

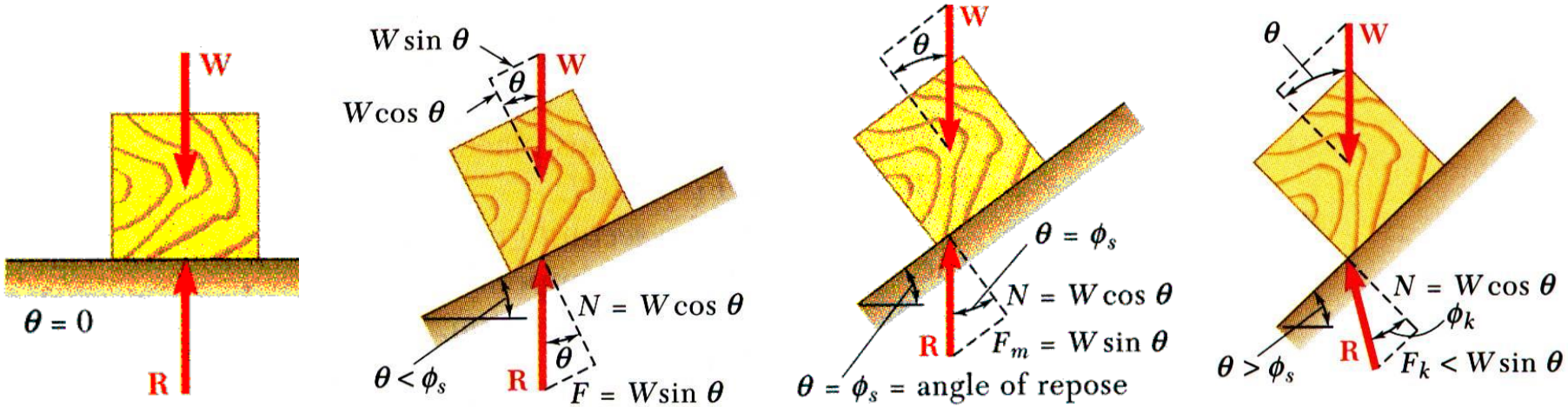

- No friction
- No motion
- Motion impending
- Motion

The coefficient of static friction between a package and the inclined conveyer belt must be sufficiently large to enable the package to be transported without slipping.

Cone of Friction

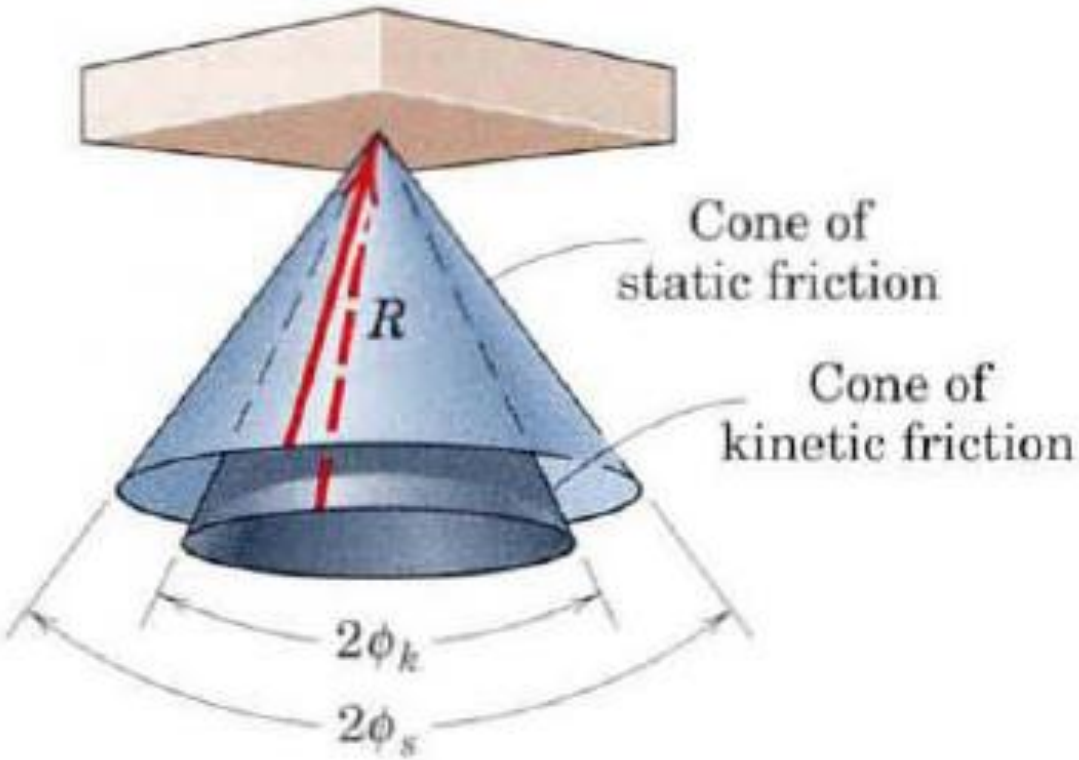

Problems Involving Dry Friction

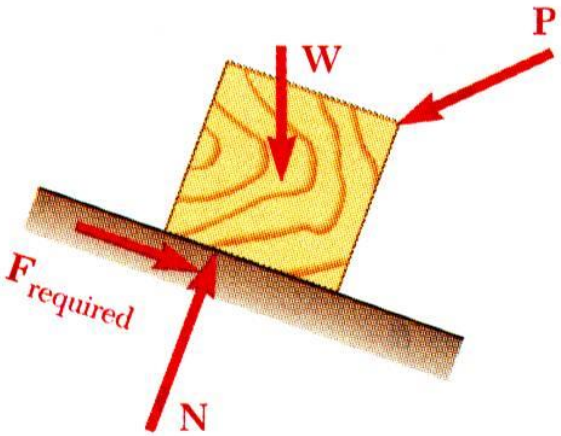

- All applied forces known
- Coefficient of static friction is known
- Determine whether body will remain at rest or slide

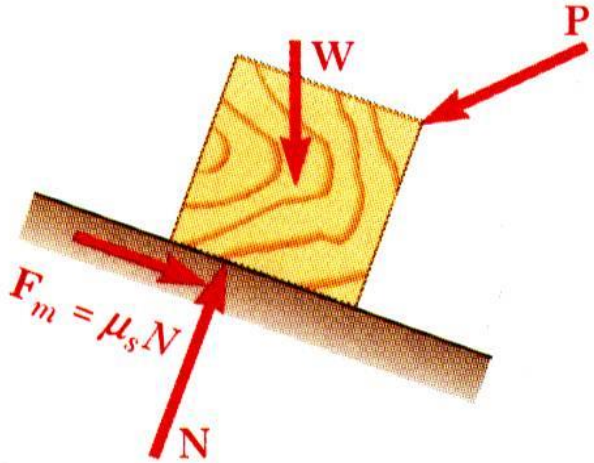

- All applied forces known
- Motion is impending
- Determine value of coefficient of static friction.

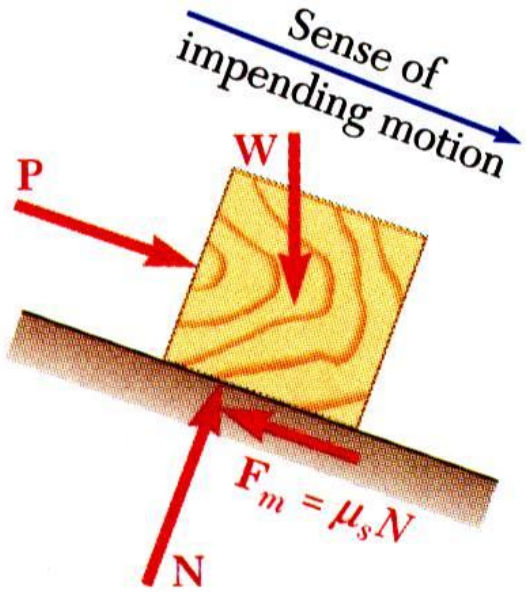

- Coefficient of static friction is known
- Motion is impending
- Determine magnitude or direction of one of the applied forces

A roll of paper has a uniform weight W and is suspended from the wire hanger so that it rests against the wall. If the hanger has a negligible weight and the bearing at O can be considered frictionless, determine the force **P needed to start turning the roll. The coefficient of static** friction between the wall and the paper is μ_s.

W = 0.75 lb
θ = 30 deg
ϕ = 30 deg
μ_s *= 0.25*
a = 3 in

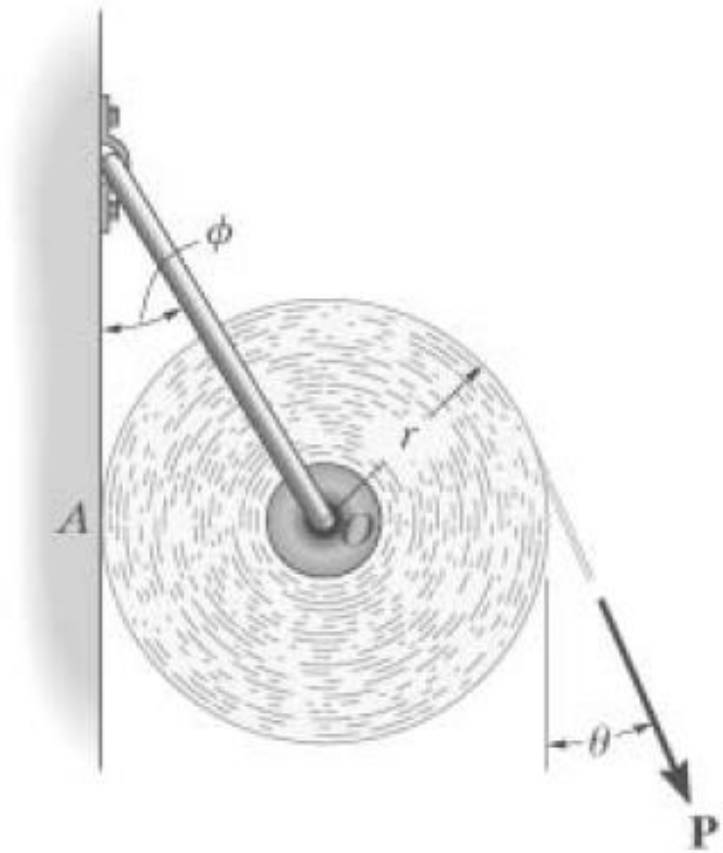

The coefficient of kinetic friction between the 40-kg crate and the slanting floor is $\mu_k = 0.3$.
If the angle α=20°, what tension must the person exert on the rope to move the crate at constant speed?

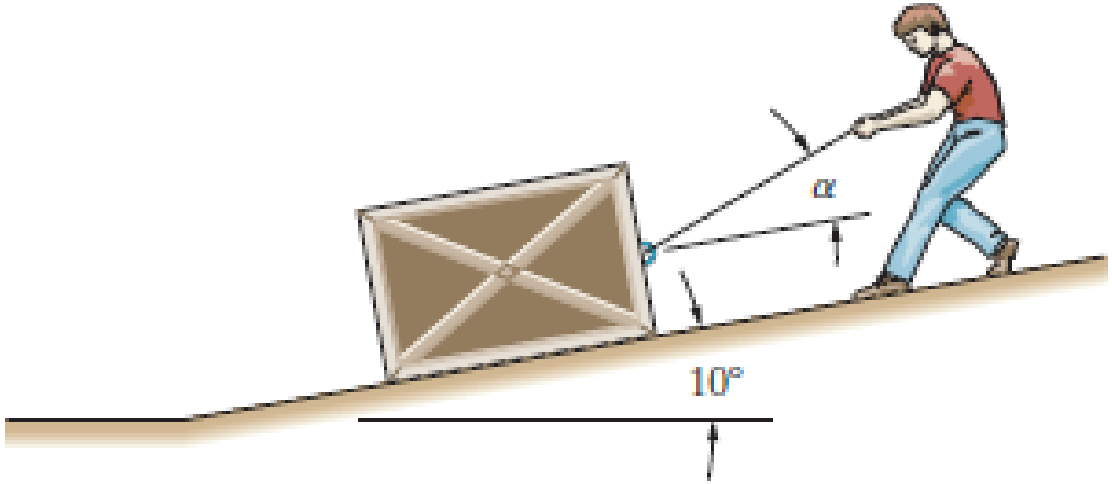

The doorstop of negligible weight is pin connected at *A and the coefficient of static friction at B is* μ_s=0.3. Assume *a = 1.5 in.*

Determine the required distance *s from A to the* floor so that the stop will resist opening of the door for any force P applied to the handle.

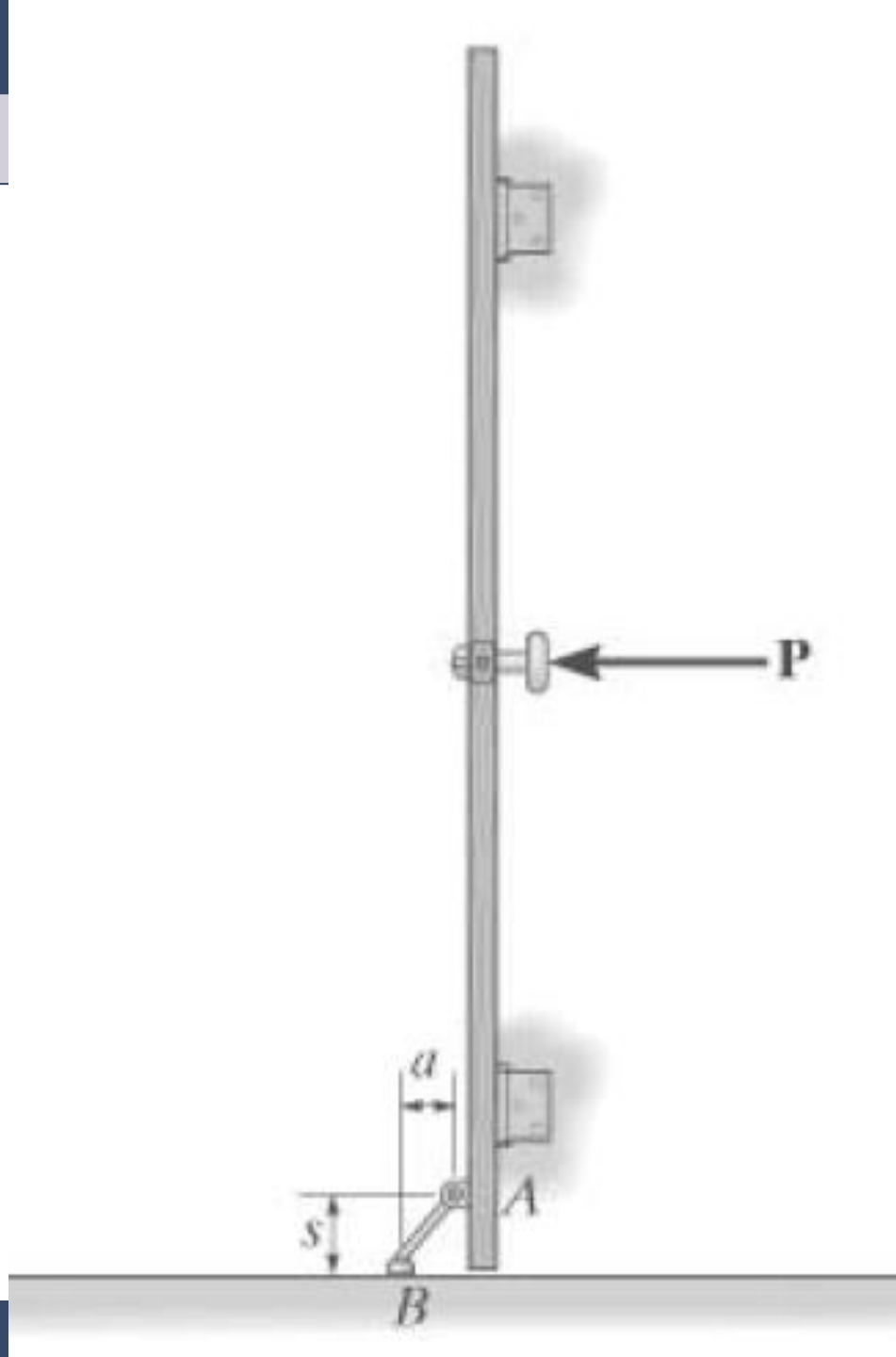

The designer of a ski resort wishes to have a portion of a beginner's slope on which the skier's speed will remain fairly constant. Tests indicate the average coefficients of friction between skis and snow to be $\mu_s = 0.10$ and $\mu_k = 0.08$. What should be the slope angle θ of the constant-speed section?

Ans. $\theta = 4.57°$

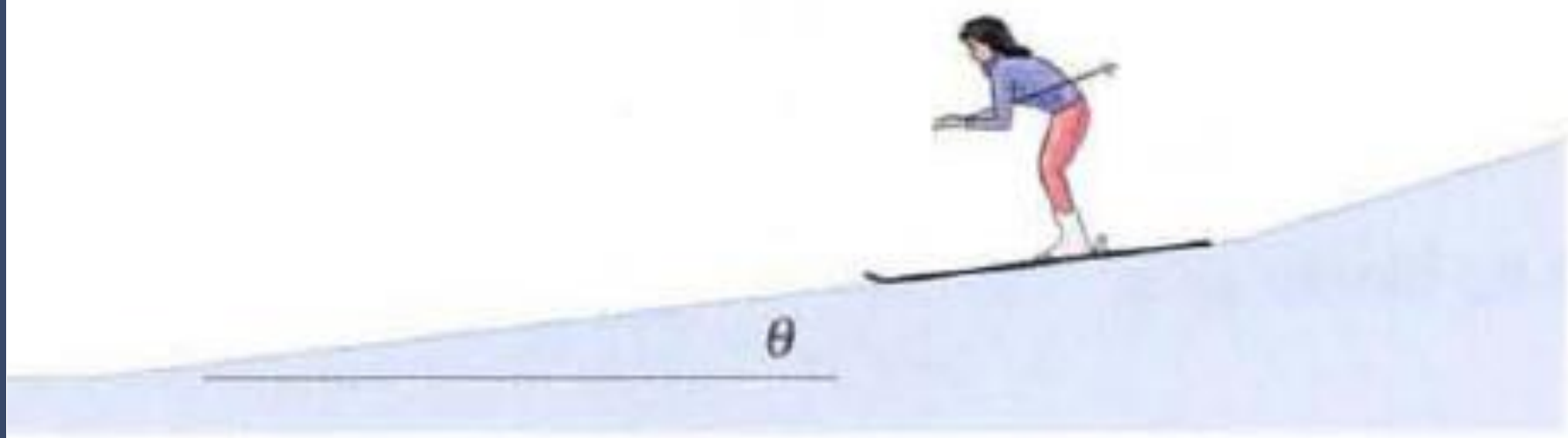

A board of weight W_1 is placed across the channel and a boy of weight W_2 attempts to walkacross. If the coefficient of static friction at A and B is μ_s , determine if he can make the crossing; and if not, how far will he get from A before the board slips?

$W_1 = 50\ lb$
$W_2 = 100\ lb$
$\mu_s = 0.4$
$a = 10\ ft$
$b = 4$
$c = 3$

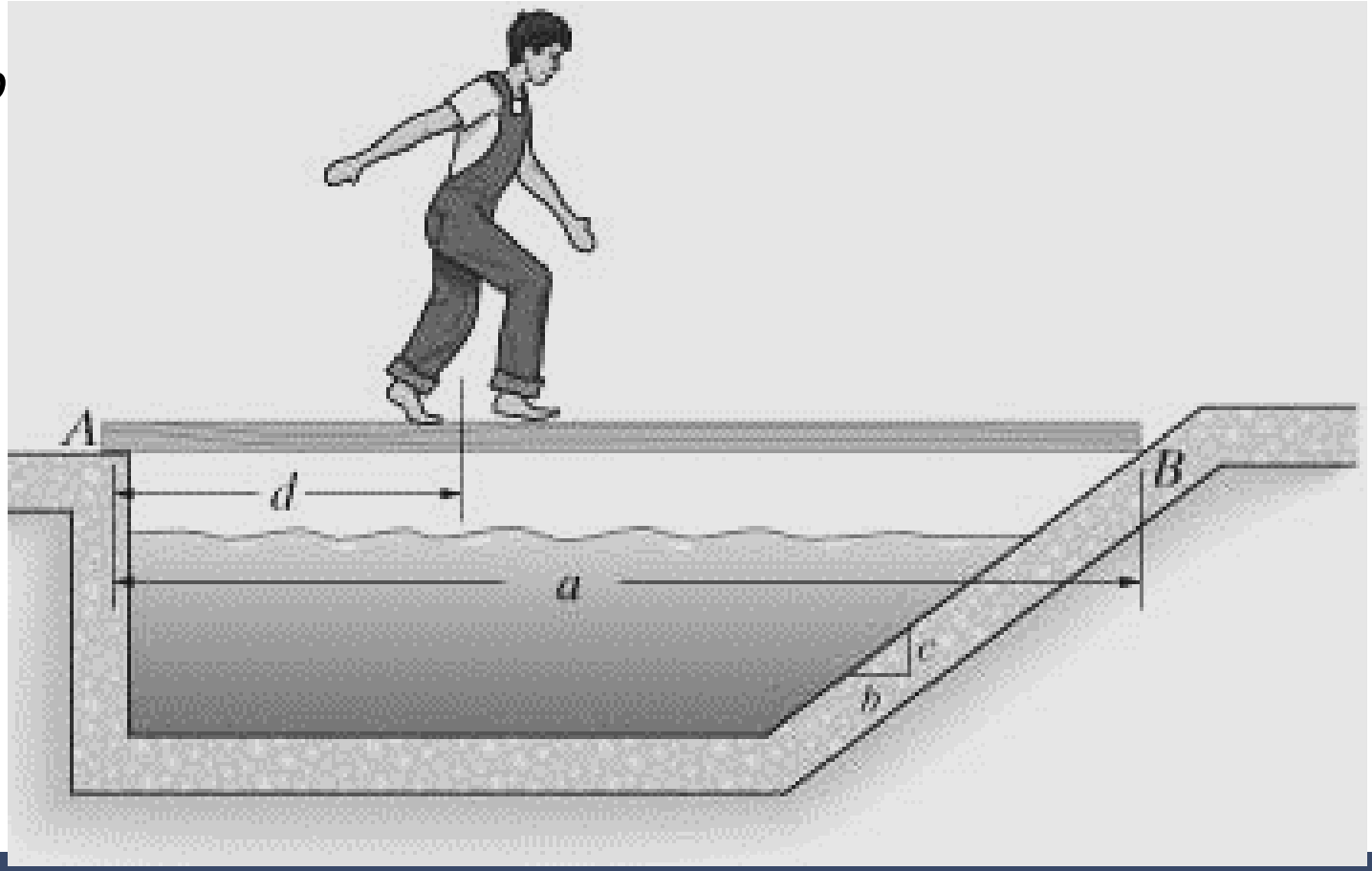

The man exerts a force P on the car at an angle α= 20°. The 1760-kg car has front wheel drive. The driver spins the front wheels, and the coefficient of kinetic friction is μ_k =0.02. Snow behind the rear tires exerts a horizontal resisting force S. Getting the car to move requires overcoming a resisting force S = 420 N.

What force P must the man exert?

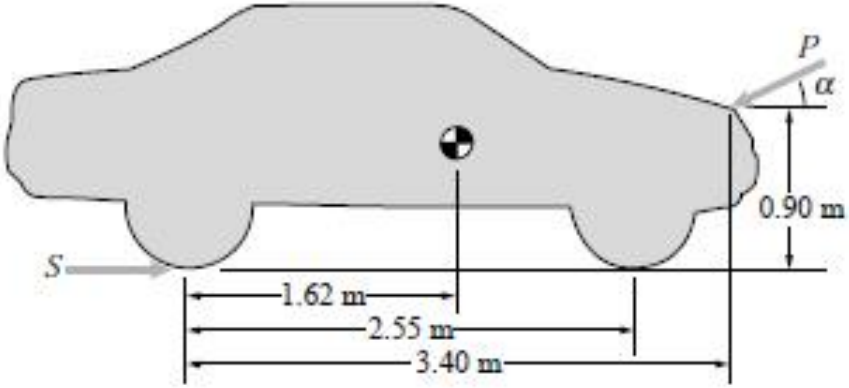

The three flat blocks are positioned on the 30° incline as shown, and a force P parallel to the incline is applied to the middle block. The upper block is prevented from moving by a wire which attaches it to the fixed support. The coefficient of static friction for each of the three pairs of mating surfaces is shown. Determine the maximum value which P may have before any slipping takes place.

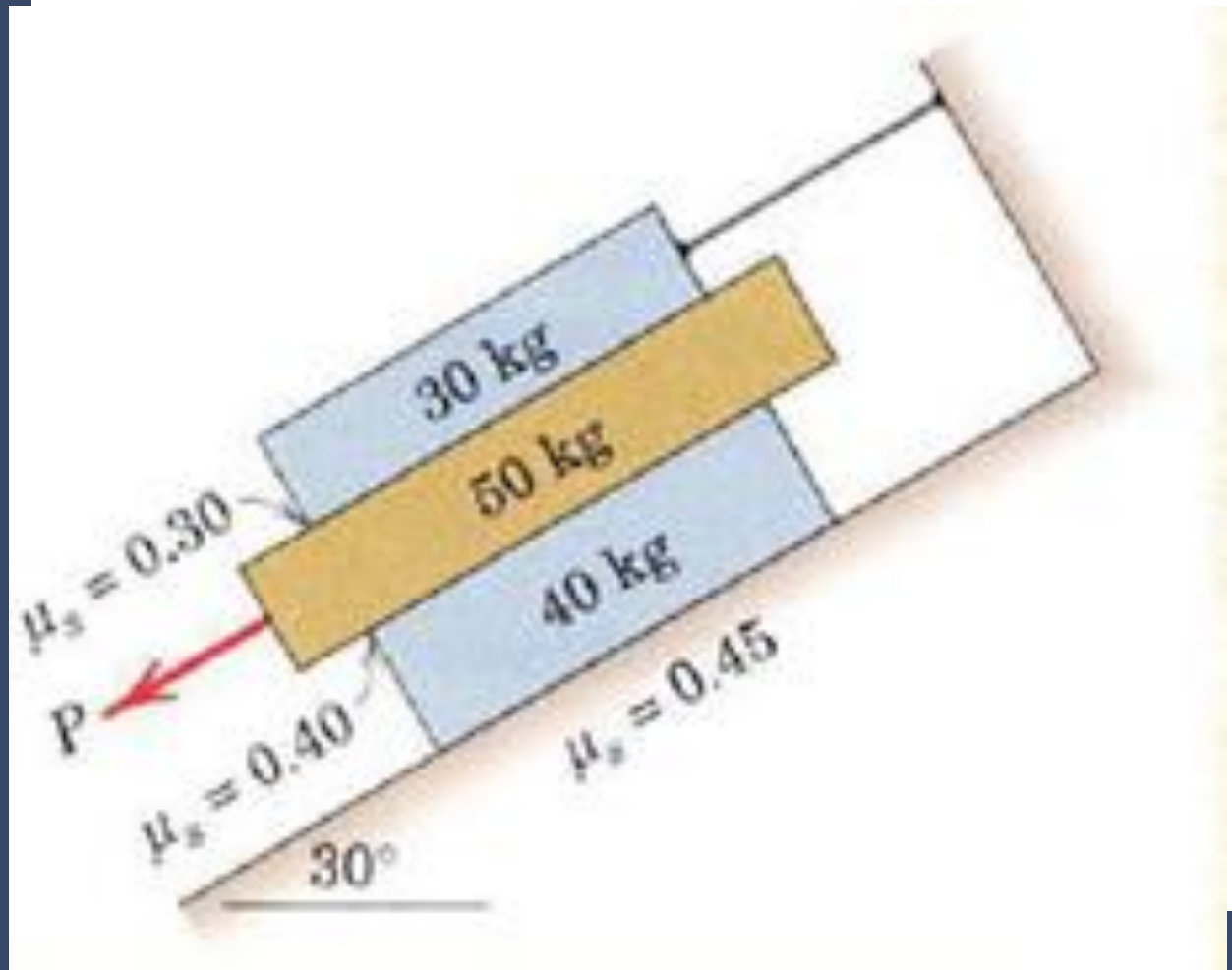

Determine the distance s to which the 90-kg painter can climb without causing the 4-m ladder to slip at its lower end A. The top of the 15-kg ladder has a small roller, and at the ground the coefficient of static friction is 0.25. The mass center of the painter is directly above her feet.

Ans. $s = 2.55$ m

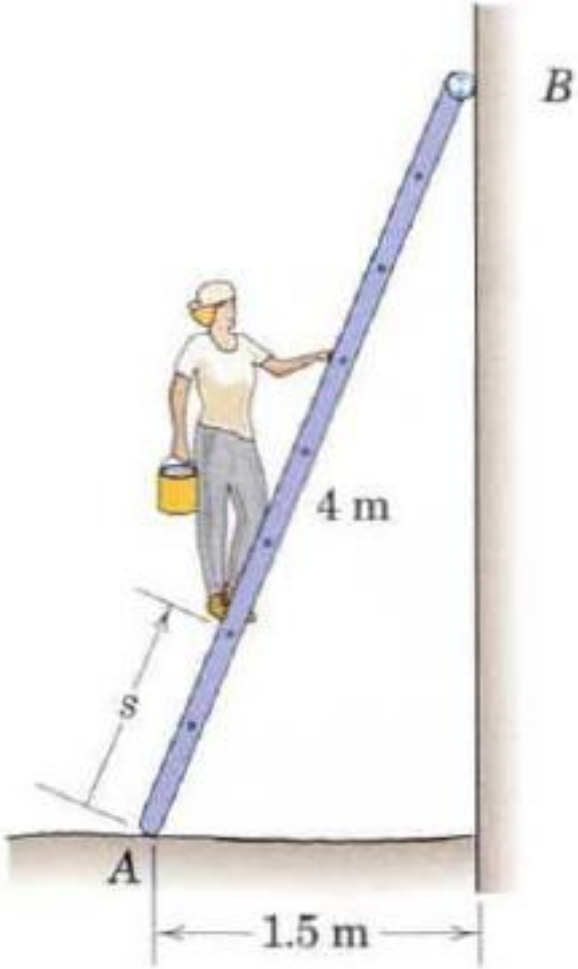

The tongs are used to handle hot steel tubes that are being heat treated in an oil bath. For a 20° jaw opening, what is the minimum co-efficient of static friction between the jaws and the tube that will enable the tongs to grip the tube without slipping?

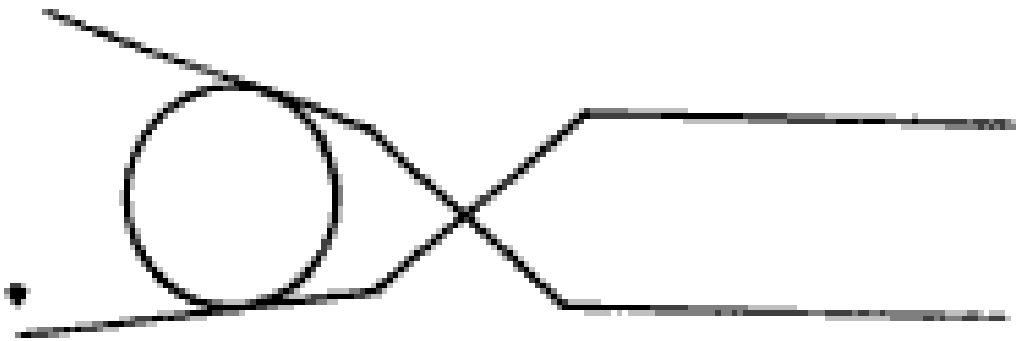

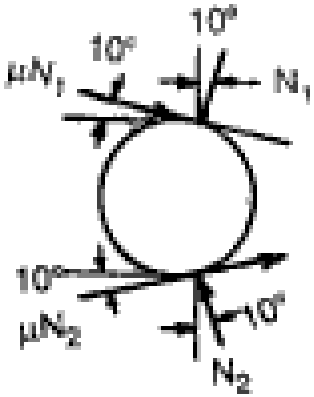

From the *FBD* of the tube,

$$N_1 \sin 10 + N_2 \sin 10 = \mu N_1 \cos 10 + \mu N_2 \cos 10$$

$$(N_1 + N_2) \sin 10 = \mu(\cos 10)(N_1 + N_2)$$

$$\frac{\sin 10}{\cos 10} = \mu$$

$$\therefore \quad \mu = 0.176$$

What must be the coefficient of friction between the gripping surfaces of the tongs and the mass *m* to prevent slipping?

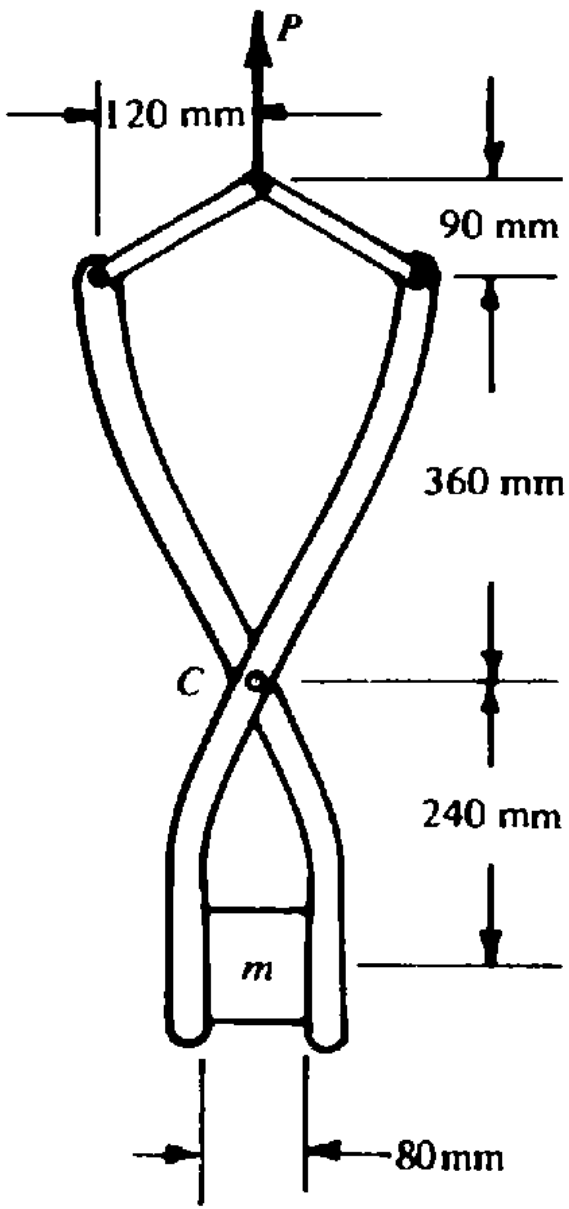

Problem

A uniform block is kept on the hinged flap of a box as shown in Fig.. Determine maximum angle θ (with horizontal) for which equilibrium of block can be maintained. $\mu_s = 0.60$ *between flap and block.*

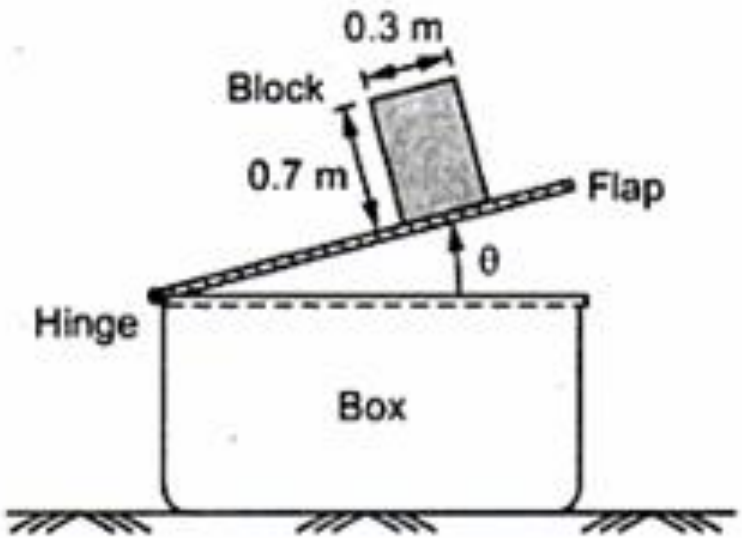

Determine the force P required to move the uniform 500 N plank from its rest position shown in Fig. , if the co-efficient of friction at both contact location = 0.5.

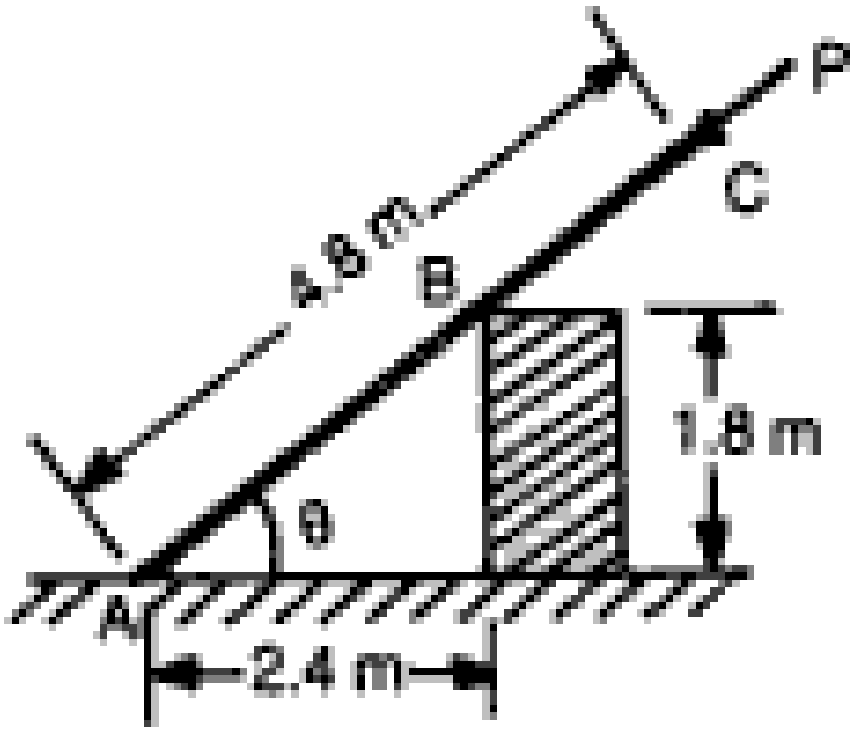

The 10-kg solid cylinder is resting in the inclined V-block. If the coefficient of static friction between the cylinder and the block is 0.50, determine (*a*) the friction force F acting on the cylinder at each side before force P is applied and (*b*) the value of P required to start sliding the cylinder up the incline.

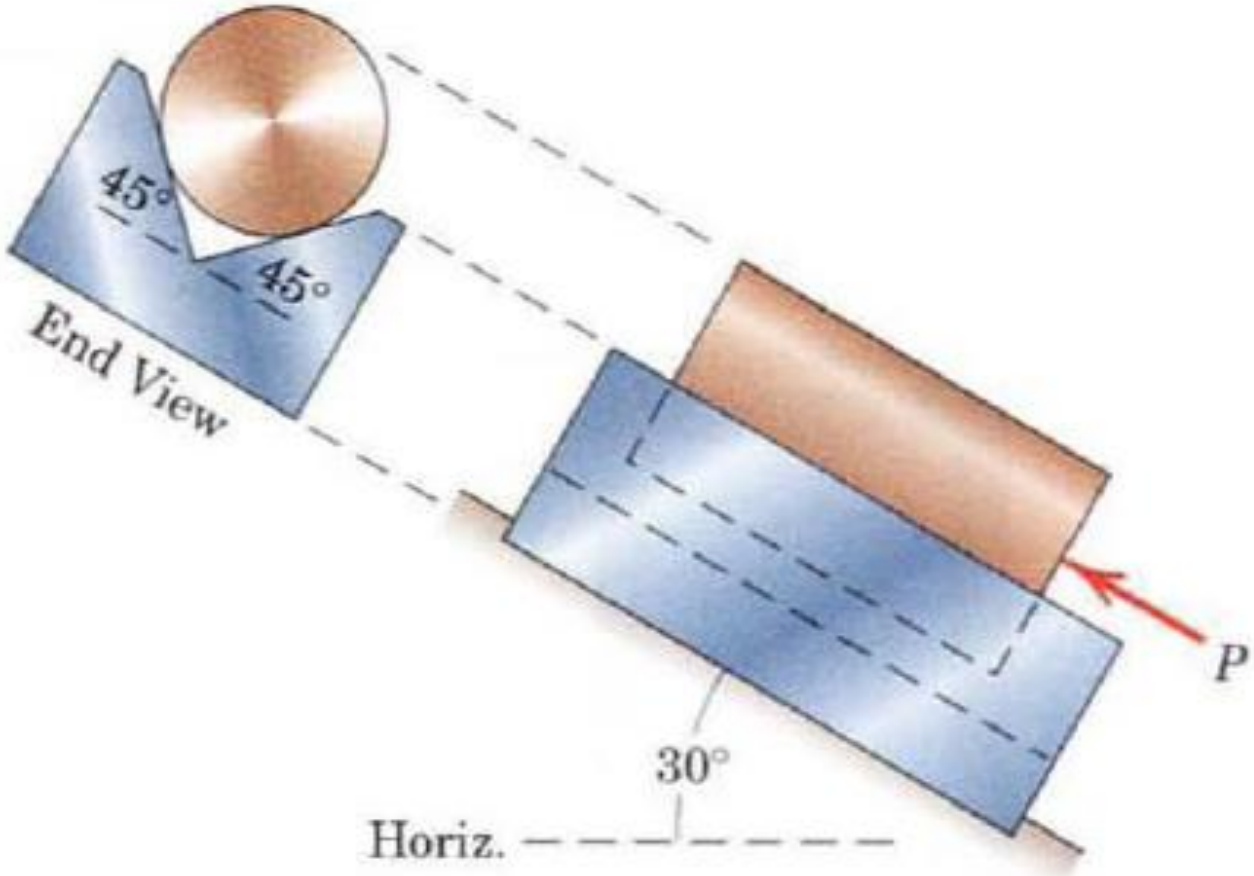

Sample Problem 2

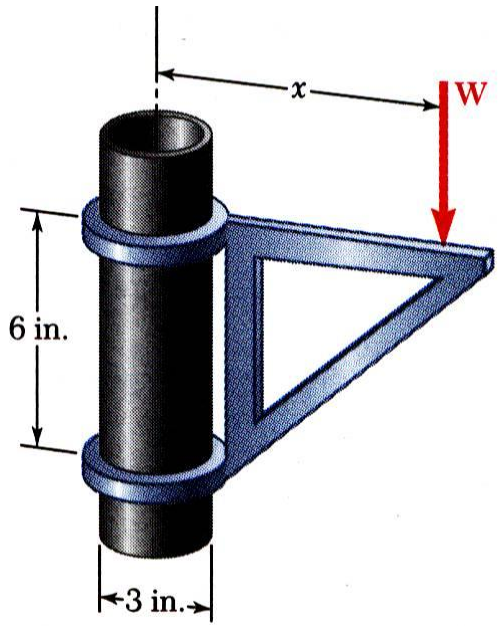

The moveable bracket shown may be placed at any height on the 3-in. diameter pipe. If the coefficient of friction between the pipe and bracket is 0.25, determine the minimum distance *x* at which the load can be supported. Neglect the weight of the bracket.

SOLUTION:

- When *W* is placed at minimum *x*, the bracket is about to slip and friction forces in upper and lower collars are at maximum value.
- Apply conditions for static equilibrium to find minimum *x*.

Sample Problem 2

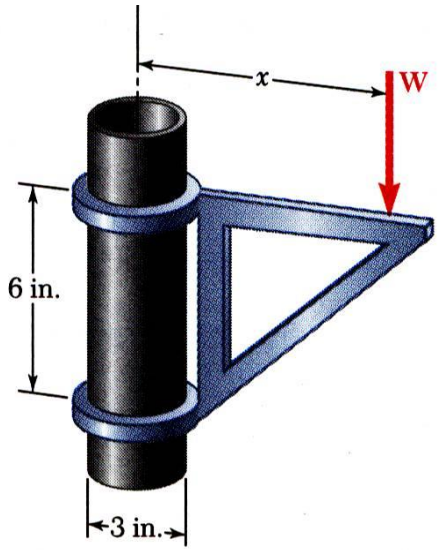

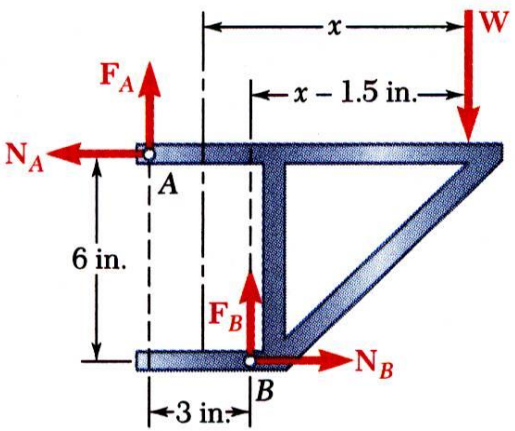

SOLUTION:

- When W is placed at minimum x, the bracket is about to slip and friction forces in upper and lower collars are at maximum value.

$$F_A = \mu_s N_A = 0.25 N_A$$

$$F_B = \mu_s N_B = 0.25 N_B$$

- Apply conditions for static equilibrium to find minimum x.

$$\sum F_x = 0: \quad N_B - N_A = 0 \qquad\qquad N_B = N_A$$

$$\sum F_y = 0: \quad F_A + F_B - W = 0$$

$$0.25 N_A + 0.25 N_B - W = 0$$

$$0.5 N_A = W \qquad\qquad N_A = N_B = 2W$$

$$\sum M_B = 0: \quad N_A(6\text{ in.}) - F_A(3\text{ in.}) - W(x - 1.5\text{ in.}) = 0$$

$$6N_A - 3(0.25N_A) - W(x - 1.5) = 0$$

$$6(2W) - 0.75(2W) - W(x - 1.5) = 0$$

$$\boxed{x = 12\text{ in.}}$$

Wedges

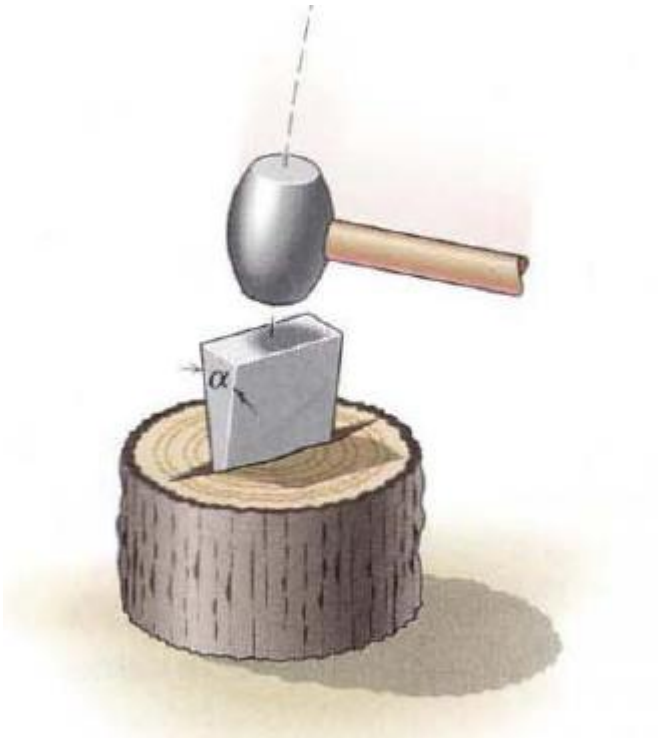

Wedges are used as shown to split tree trunks because the normal forces exerted by the wedges on the wood are much larger than the forces required to insert the wedges.

Wedges

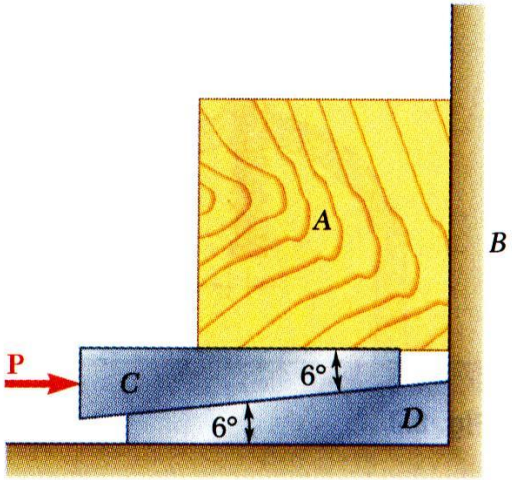

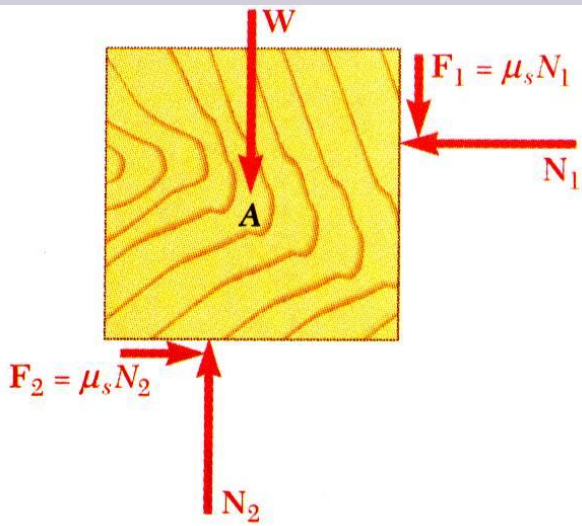

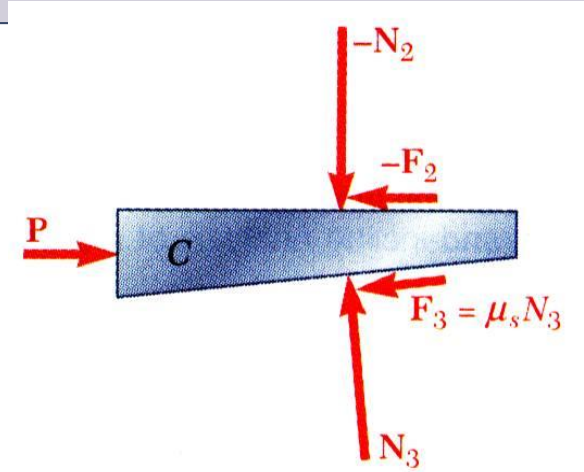

- *Wedges* - simple machines used to raise heavy loads.
- Force required to lift block is significantly less than block weight.
- Friction prevents wedge from sliding out.
- Want to find minimum force *P* to raise block.

- Block as free-body

$$\sum F_x = 0:$$
$$-N_1 + \mu_s N_2 = 0$$
$$\sum F_y = 0:$$
$$-W - \mu_s N_1 + N_2 = 0$$

or

$$\vec{R}_1 + \vec{R}_2 + \vec{W} = 0$$

- Wedge as free-body

$$\sum F_x = 0:$$
$$-\mu_s N_2 - N_3(\mu_s \cos 6° - \sin 6°) + P = 0$$
$$\sum F_y = 0:$$
$$-N_2 + N_3(\cos 6° - \mu_s \sin 6°) = 0$$

or

$$\vec{P} - \vec{R}_2 + \vec{R}_3 = 0$$

The horizontal position of the 500-kg rectangular block of concrete is adjusted by the 5° wedge under the action of the force **P**. If the coefficient of static friction for both pairs of wedge surfaces is 0.30 and if the coefficient of static friction between the block and the horizontal surface is 0.60, determine the least force P required to move the block.

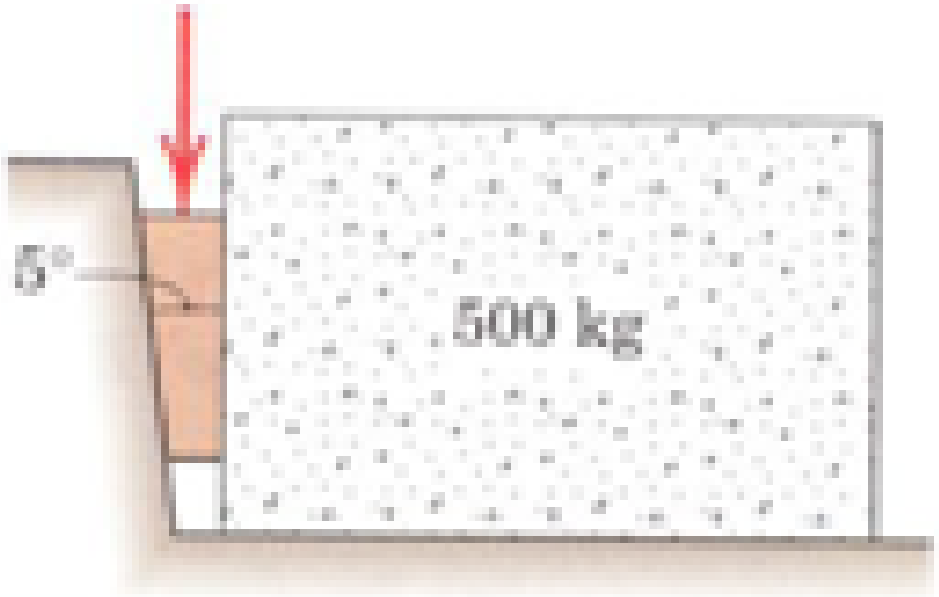

A 1600-kg rear-wheel-drive car is being driven up the ramp at a slow steady speed. Determine the minimum coefficient of static friction μ_s for which the portable ramp will not slip forward. Also determine the required friction force F_A at each rear drive wheel.

Ans. $\mu_s = 0.3$, $F_A = 1294$ N

Square Threaded Screws

Square Threaded Screws are frequently used in jacks, presses, and other mechanisms.
Their analysis is similar to the analysis of a block sliding along an inclined plane.

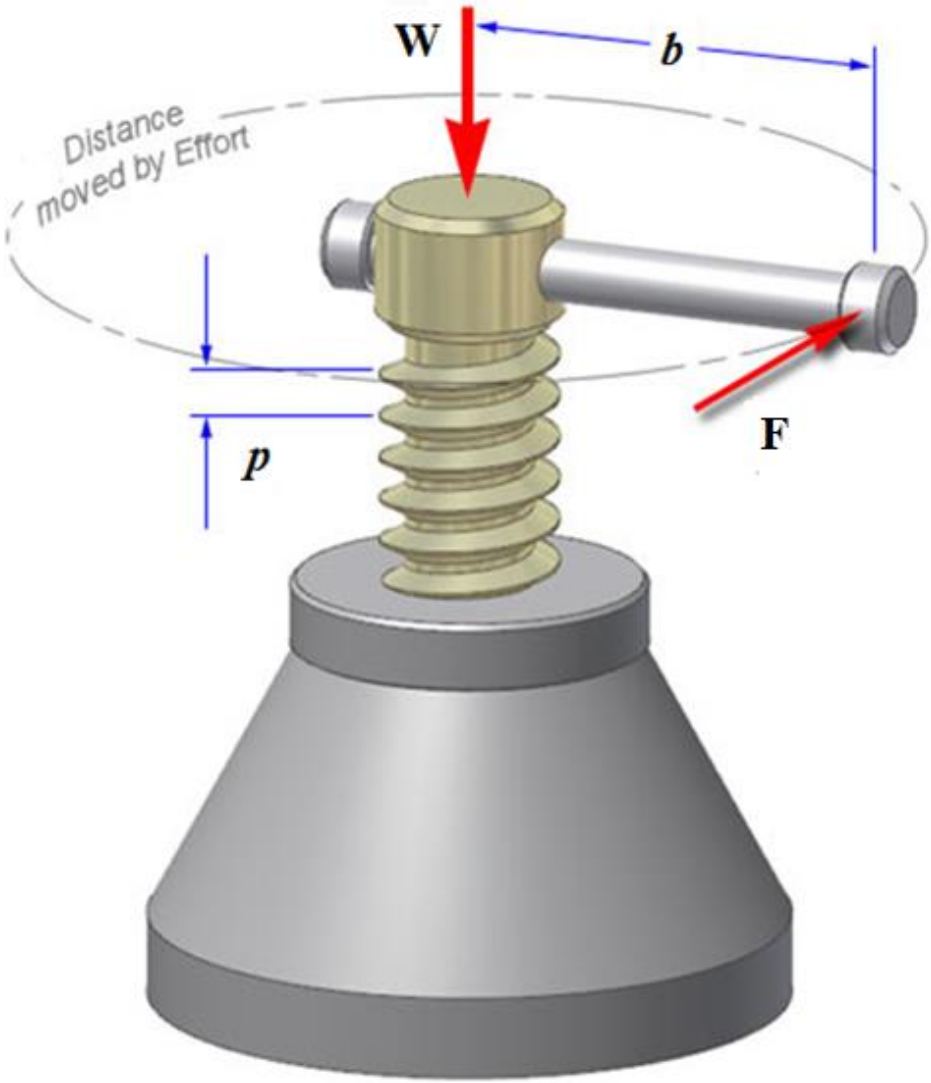

The screw is an inclined plane wound around a central cylinder.

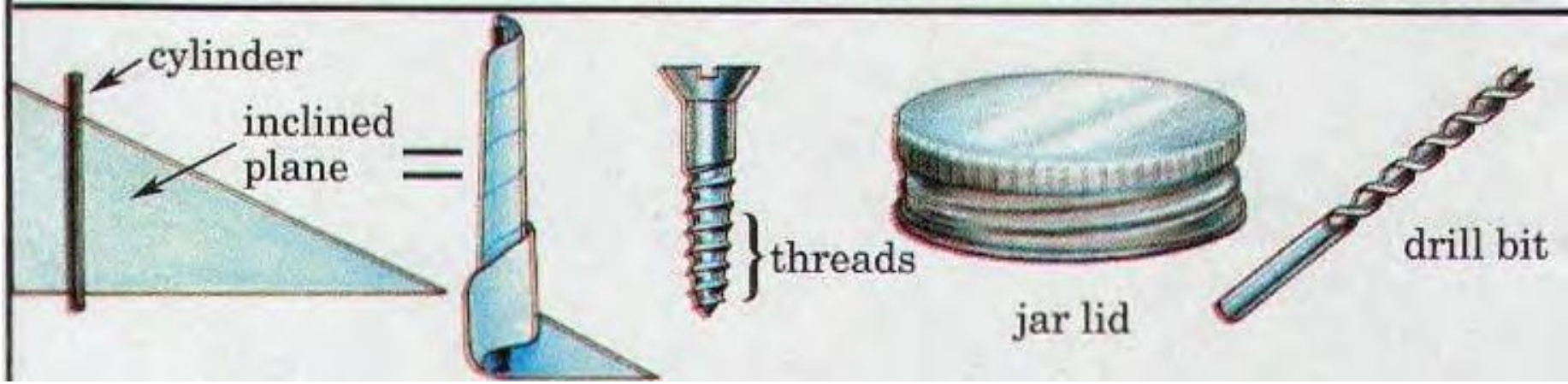

Problem: For large mechanical advantage i.e. magnification of effort an inclined plane with lower slope or smaller angle of inclination needs to be used. But such planes have a long base for a given rise of load.

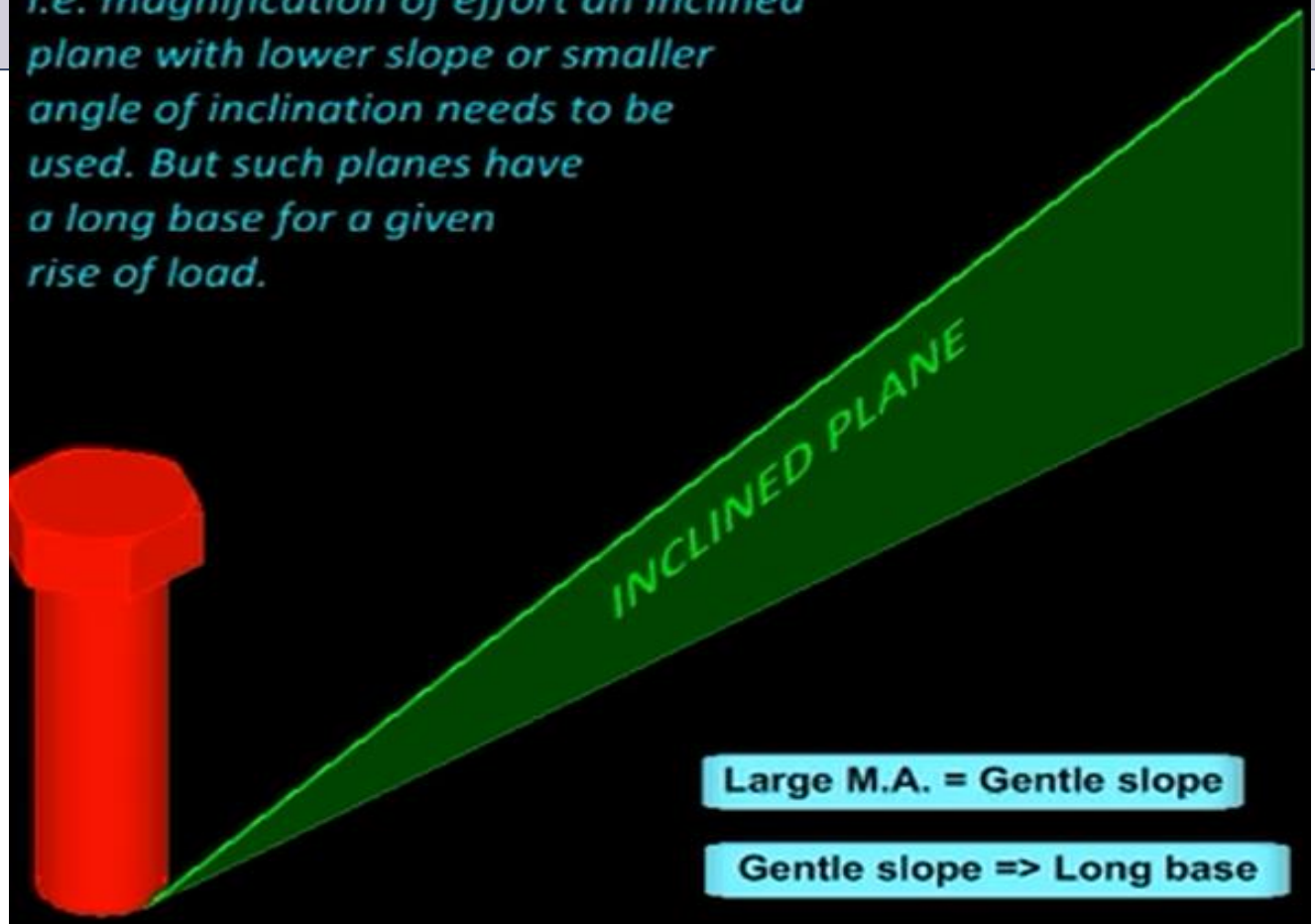

Solution: The inclined plane can be 'wound' around a cyliner to makes it compact. This forms a helical thread commonly used on nuts and bolts. Rotational motion of the nut relative to the vertically fixed bolt, makes it to move in the axial i.e. vertical direction, thereby raising the load.

Problem: *For large mechanical advantage i.e. magnification of effort an inclined plane with lower slope or smaller angle of inclination needs to be used. But such planes have a long base for a given rise of load.*

Nut + Bolt = Compact Inclined Plane!

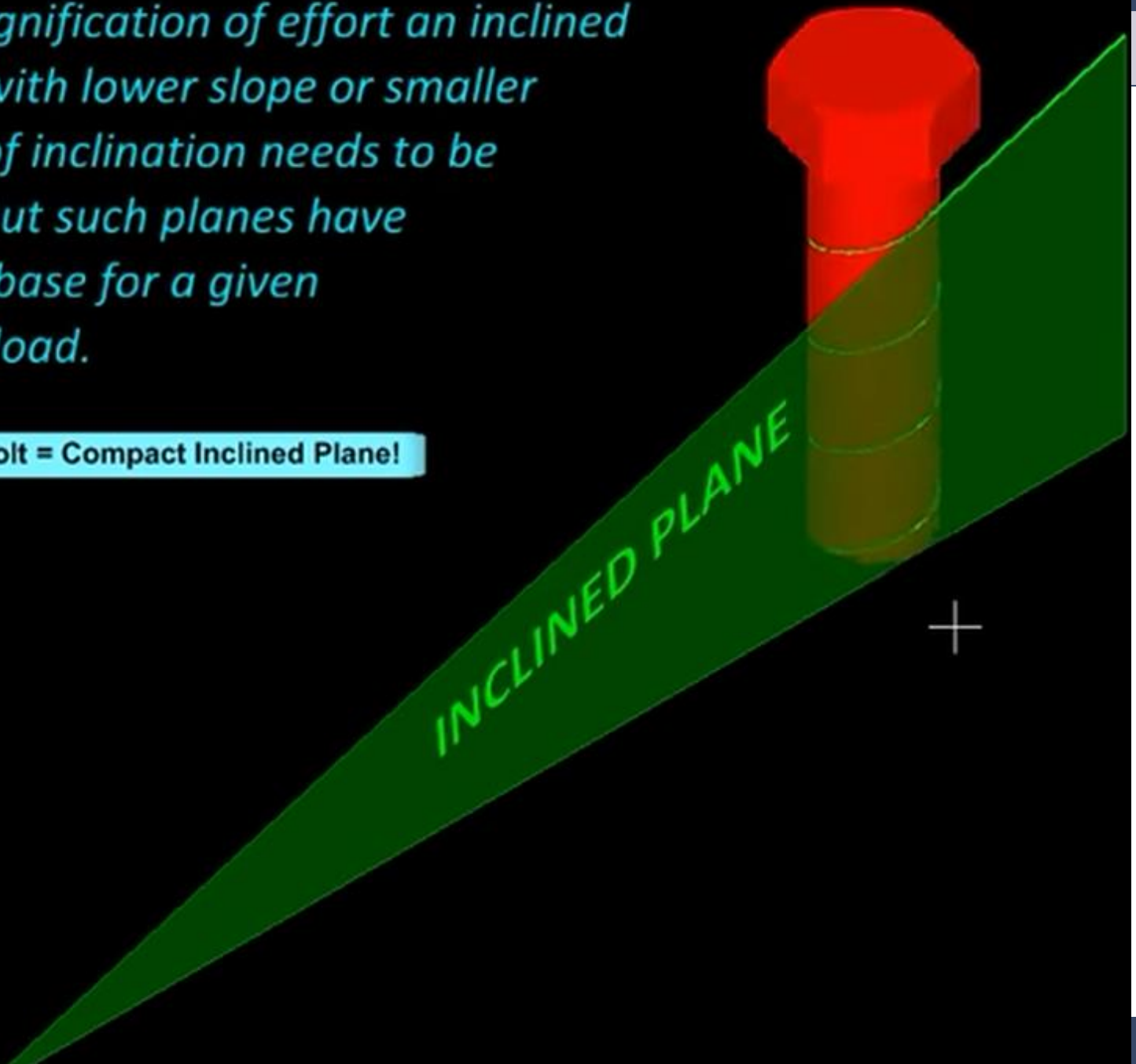

Screw Jack: One of the several possible is shown below. The **bolt** is mounted vertically on a **base**. The **nut** has a handle of radius (**R**) to apply the effort (**E**). **Load** (**W**) restsing on a collor moves up with the **nut**. If (**L**) is the lead of the screw, In one rotation of the **nut**,

Displacement of Effort = $2\pi R$

Displacement of Load = L

Velocity Ratio $VR = L/(2\pi R)$ Which will also be the ideal Mechanical Advantage (**MA**)

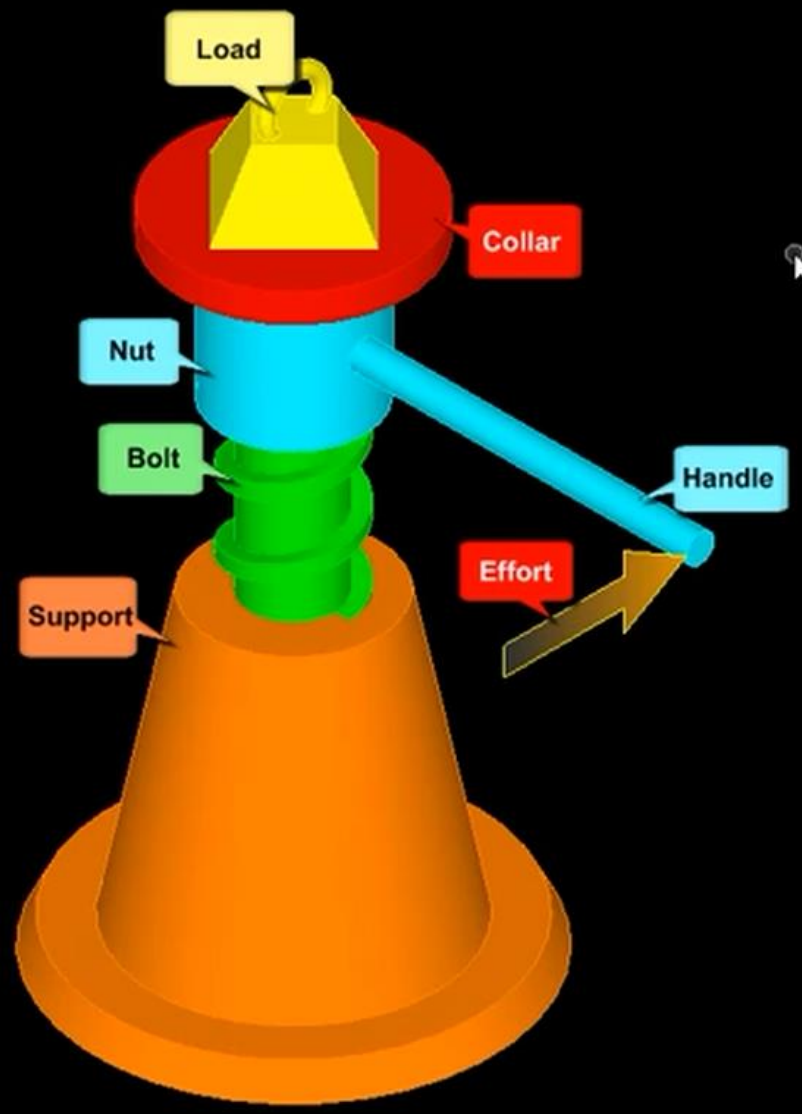

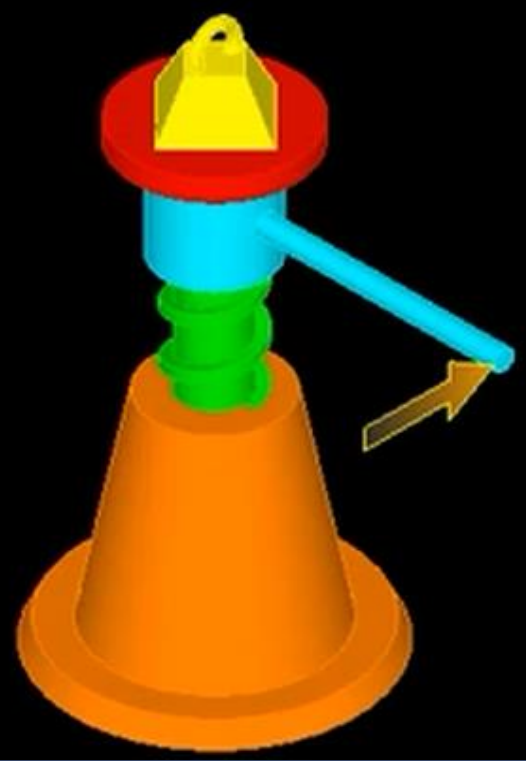

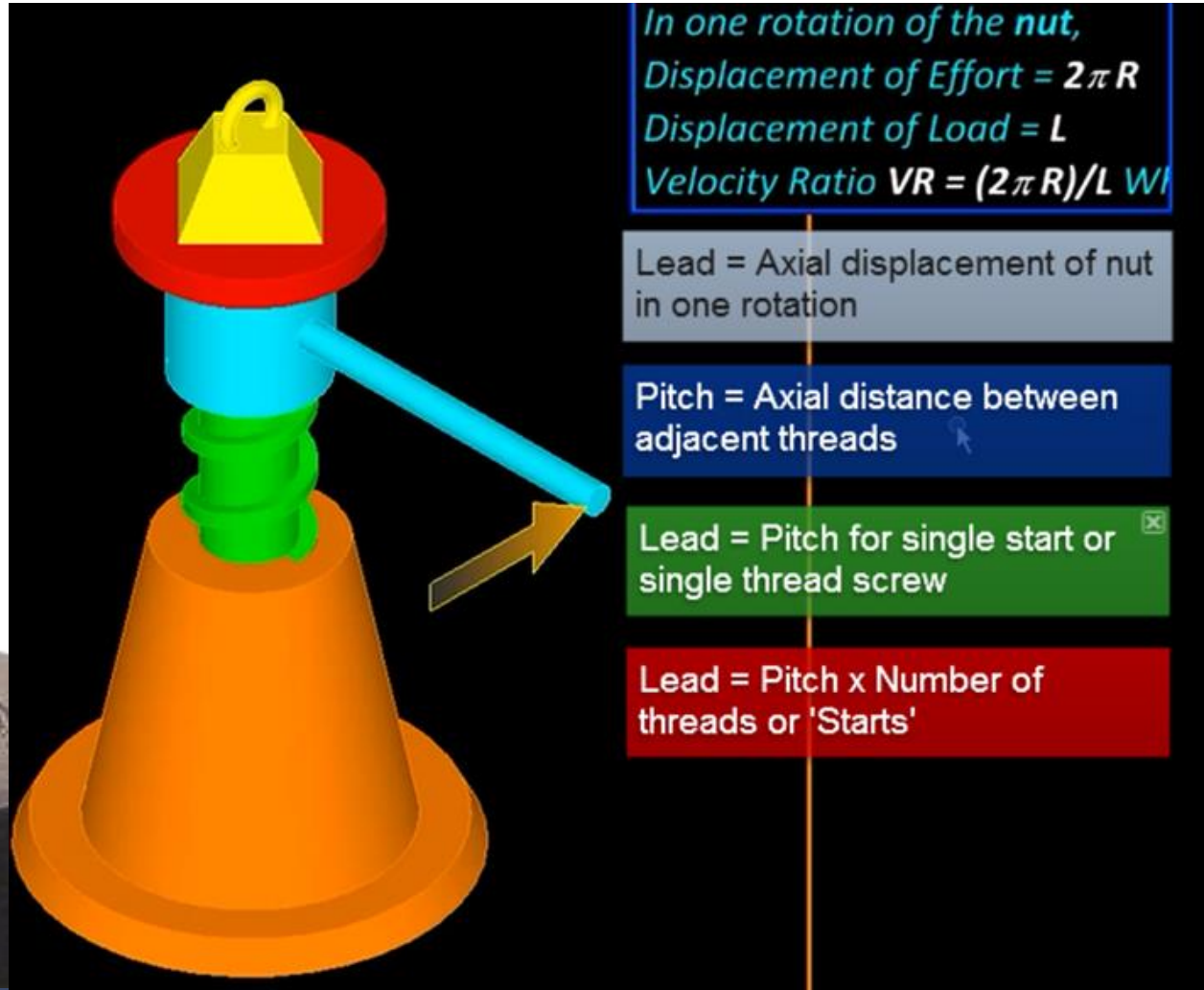
In one rotation of the nut,
Displacement of Effort = 2πR
Displacement of Load = L
Velocity Ratio VR = (2πR)/L
Lead = Axial displacement of nut in one rotation
Pitch = Axial distance between adjacent threads
Lead = Pitch for single start or single thread screw
Lead = Pitch x Number of threads or 'Starts'

Screw Jack

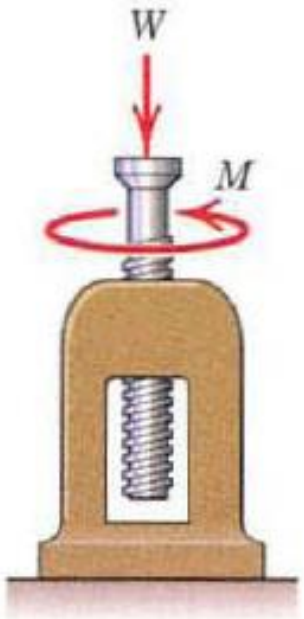

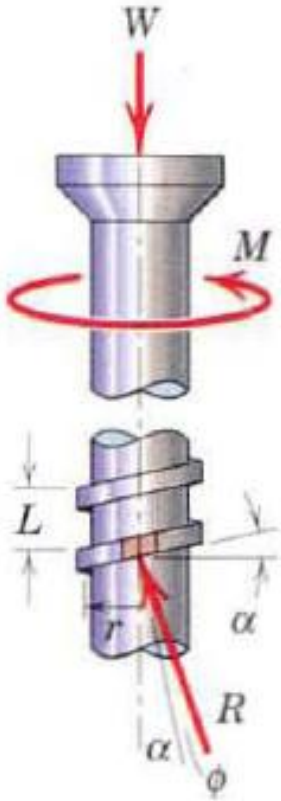

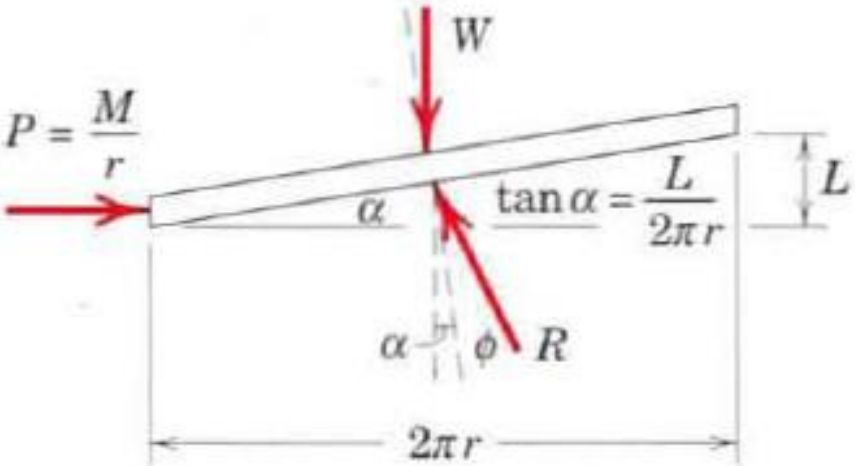

(a) To raise load

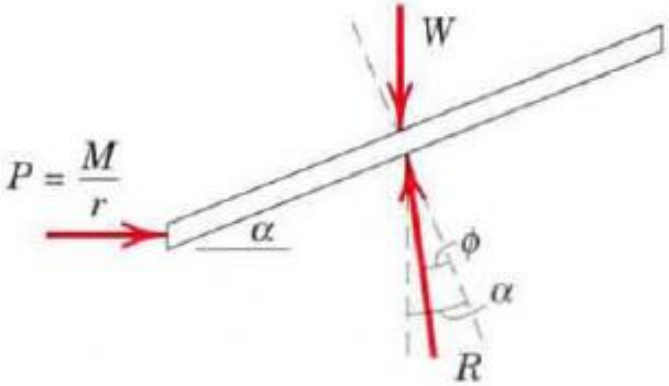

(c) To lower load ($\alpha > \phi$)

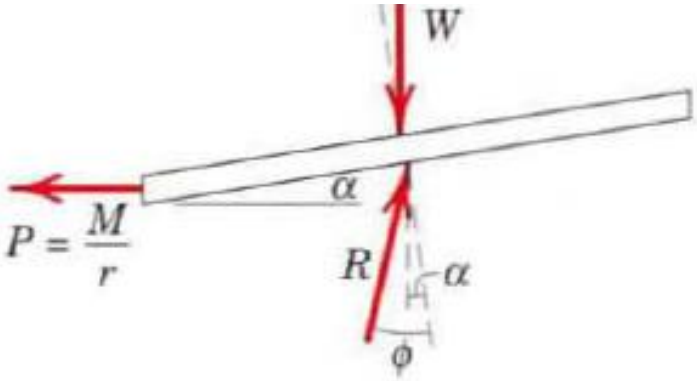

(b) To lower load ($\alpha < \phi$)

Square-Threaded Screws

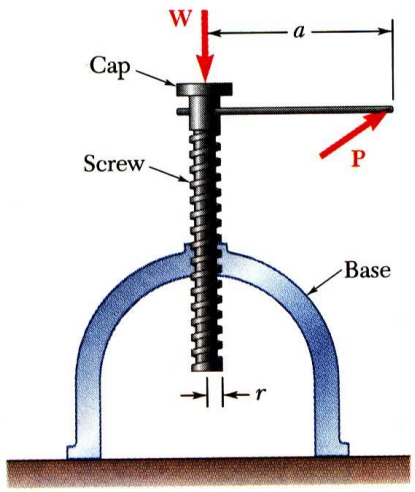

- Square-threaded screws frequently used in jacks, presses, etc. Analysis similar to block on inclined plane. Recall friction force does not depend on area of contact.
- Thread of base has been "unwrapped" and shown as straight line. Slope is $2\pi r$ horizontally and lead L vertically.
- Moment of force Q is equal to moment of force P. $Q = Pa/r$

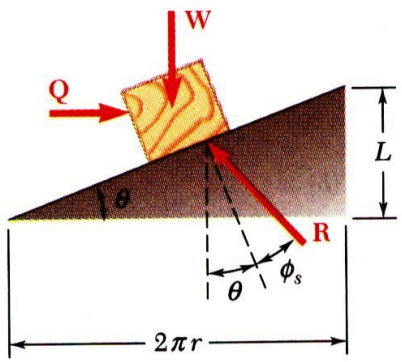

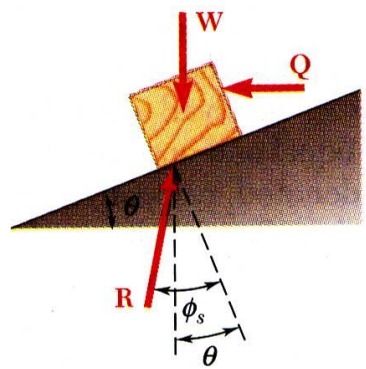

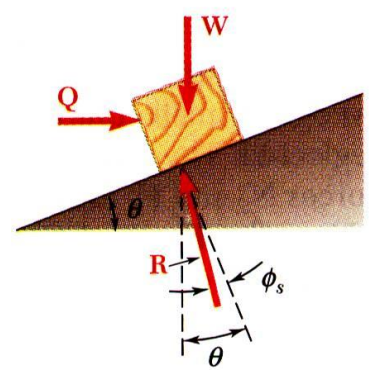

- Impending motion upwards. Solve for Q.
- $\phi_s > \theta$, Self-locking, solve for Q to lower load.
- $\phi_s > \theta$, Non-locking, solve for Q to hold load.

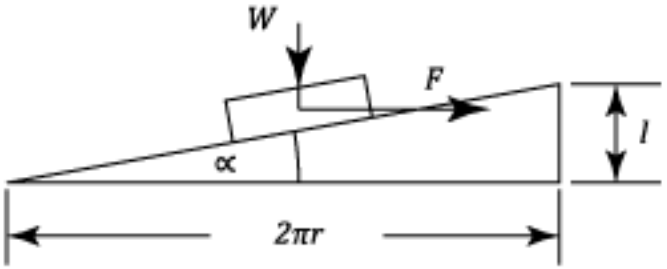
W
F
l
∝
2πr

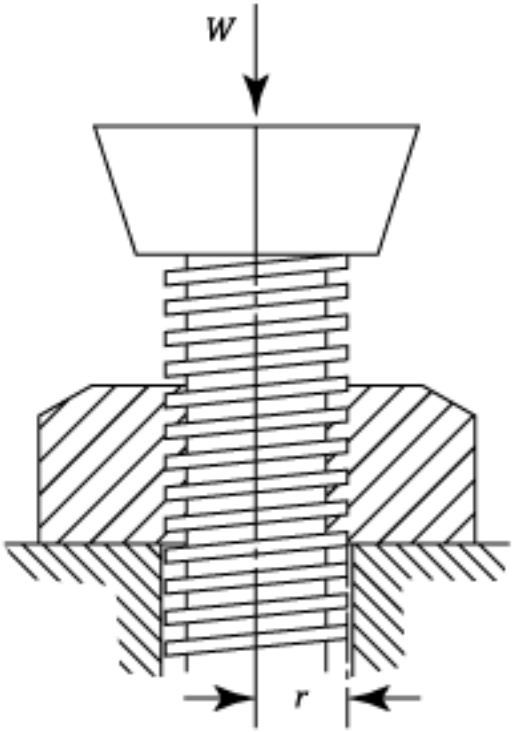
W
r

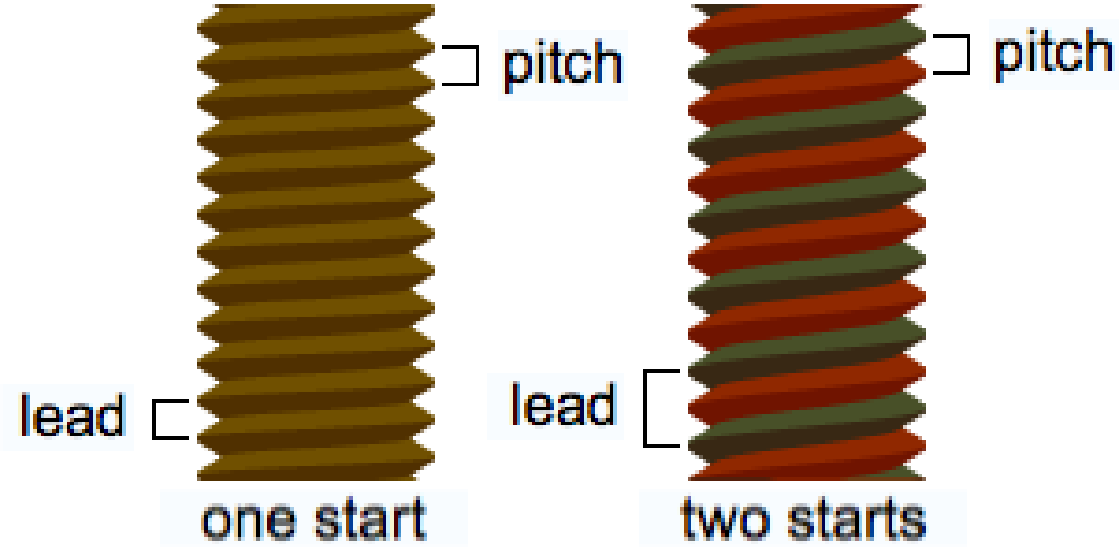
pitch
lead
one start
pitch
lead
two starts

Sample Problem 3

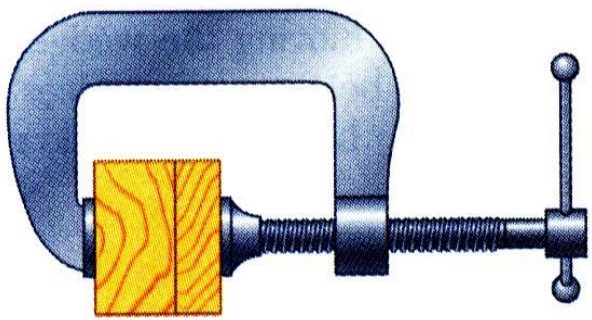

A clamp is used to hold two pieces of wood together as shown. The clamp has a double square thread of mean diameter equal to 10 mm with a pitch of 2 mm. The coefficient of friction between threads is $\mu_s = 0.30$.

If a maximum torque of 40 N*m is applied in tightening the clamp, determine (a) the force exerted on the pieces of wood, and (b) the torque required to loosen the clamp.

SOLUTION

- Calculate lead angle and pitch angle.
- Using block and plane analogy with impending motion up the plane, calculate the clamping force with a force triangle.
- With impending motion down the plane, calculate the force and torque required to loosen the clamp.

Sample Problem 3

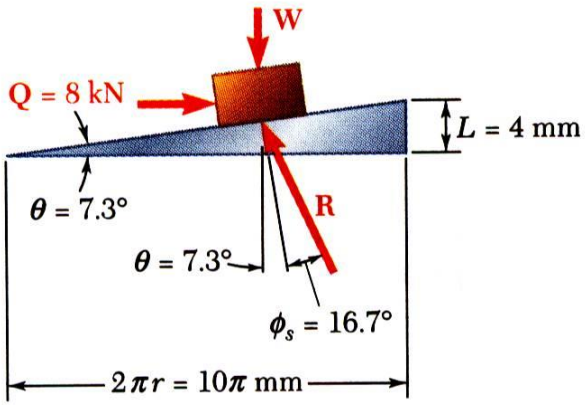

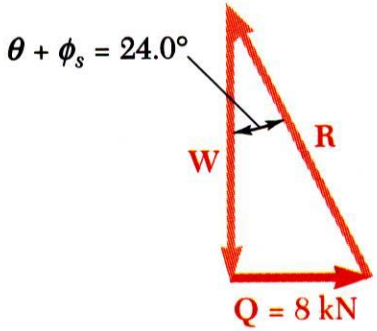

SOLUTION

- Calculate lead angle and pitch angle. For the double threaded screw, the lead L is equal to twice the pitch.

$$\tan\theta = \frac{L}{2\pi r} = \frac{2(2\text{ mm})}{10\pi\text{ mm}} = 0.1273 \qquad \theta = 7.3°$$

$$\tan\phi_s = \mu_s = 0.30 \qquad \phi_s = 16.7°$$

- Using block and plane analogy with impending motion up the plane, calculate clamping force with force triangle.

$$Qr = 40\text{ N}\cdot\text{m} \qquad Q = \frac{40\text{ N}\cdot\text{m}}{5\text{ mm}} = 8\text{ kN}$$

$$\tan(\theta + \phi_s) = \frac{Q}{W} \qquad W = \frac{8\text{ kN}}{\tan 24°}$$

$$\boxed{W = 17.97\text{ kN}}$$

Sample Problem 3

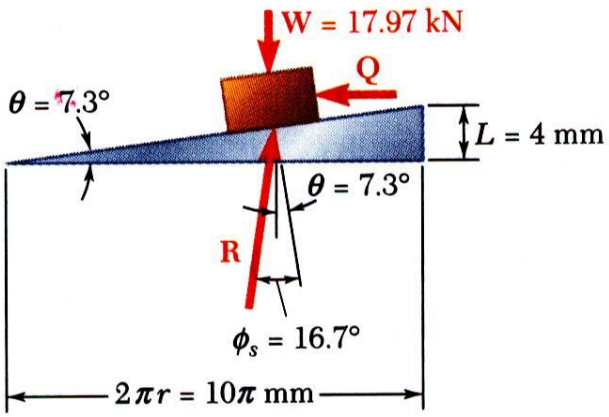

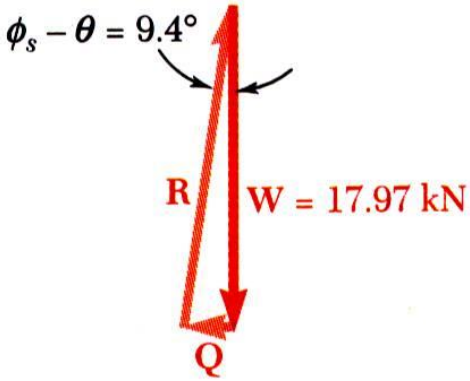

- With impending motion down the plane, calculate the force and torque required to loosen the clamp.

$$\tan(\phi_s - \theta) = \frac{Q}{W} \qquad Q = (17.97\,\text{kN})\tan 9.4°$$

$$Q = 2.975\,\text{kN}$$

$$Torque = Q\,r = (2.975\,\text{kN})(5\,\text{mm})$$

$$= \left(2.975\times10^{3}\,\text{N}\right)\left(5\times10^{-3}\,\text{m}\right)$$

$$\boxed{Torque = 14.87\,\text{N}\cdot\text{m}}$$

Flat Belt drive

V Belt drive

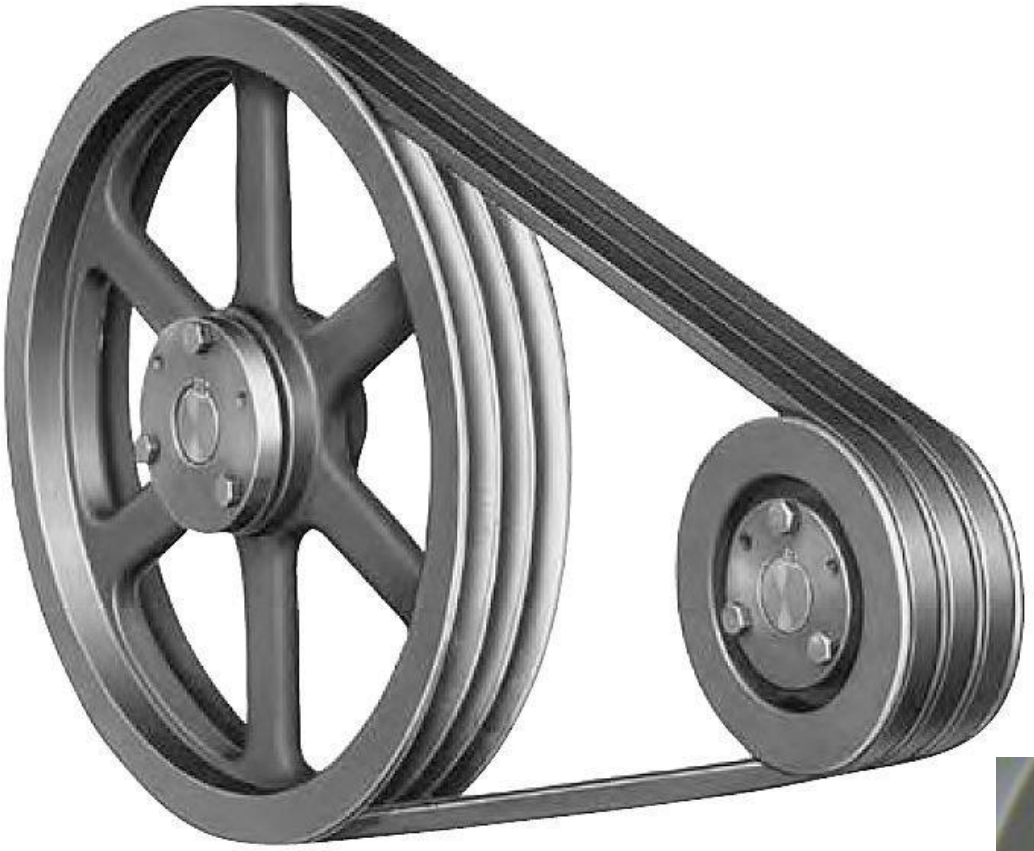

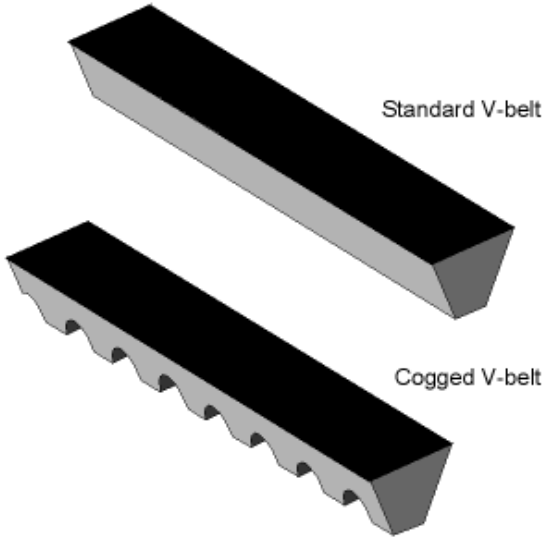
Standard V-belt
Cogged V-belt

www.gasgoo.com/showroom/selinahao

V Belt drive

With a starting price of $200, the 1910 Emblem was a popular choice for early motorcycle buyers.

Belt Friction

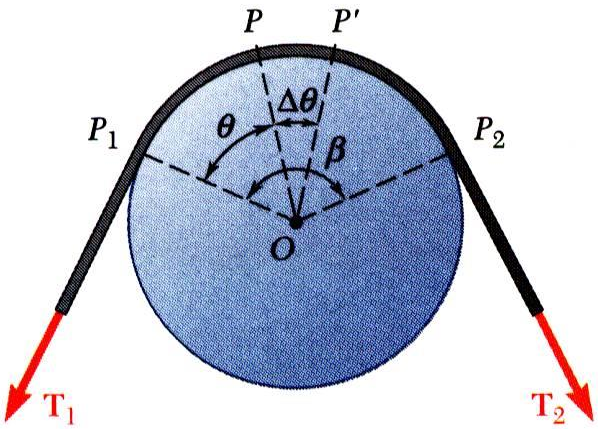

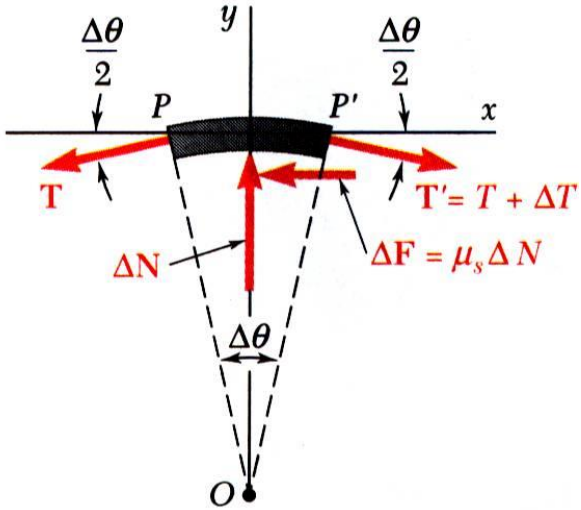

- Relate T_1 and T_2 when belt is about to slide to right.
- Draw free-body diagram for element of belt

$$\sum F_x = 0: \quad (T+\Delta T)\cos\frac{\Delta\theta}{2} - T\cos\frac{\Delta\theta}{2} - \mu_s \Delta N = 0$$

$$\sum F_y = 0: \quad \Delta N - (T+\Delta T)\sin\frac{\Delta\theta}{2} - T\sin\frac{\Delta\theta}{2} = 0$$

- Combine to eliminate ΔN, divide through by $\Delta\theta$,

$$\frac{\Delta T}{\Delta\theta}\cos\frac{\Delta\theta}{2} - \mu_s\left(T + \frac{\Delta T}{2}\right)\frac{\sin(\Delta\theta/2)}{\Delta\theta/2}$$

- In the limit as $\Delta\theta$ goes to zero,

$$\frac{dT}{d\theta} - \mu_s T = 0$$

- Separate variables and integrate from $\theta = 0$ to $\theta = \beta$

$$\ln\frac{T_2}{T_1} = \mu_s \beta \quad \text{or} \quad \frac{T_2}{T_1} = e^{\mu_s \beta}$$

Two cylinders are connected by a rope that passes over two fixed rods as shown. Knowing that the coefficient of static friction between the rope and the rods is 0.40, determine the range of values of the mass m of cylinder D for which equilibrium is maintained.

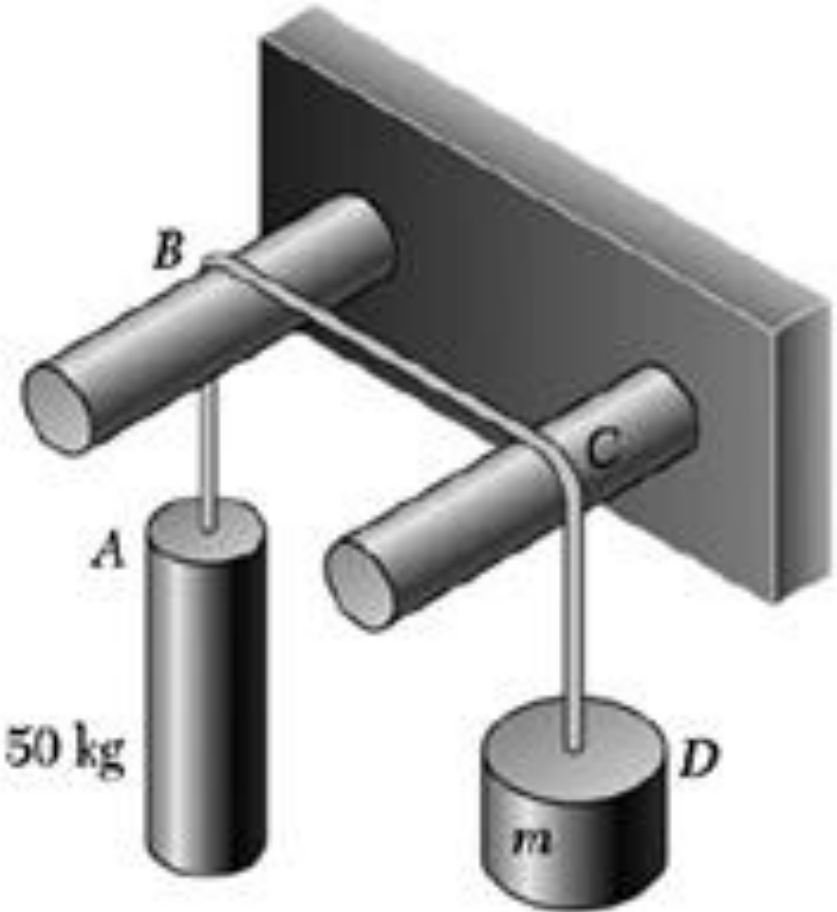

The 180-lb rock climber is lowered over the edge of the cliff by his two companions, who together exert a horizontal pull T of 75 lb on the rope. Compute the coefficient of friction μ between the rope and the rock.

Ans. $\mu = 0.699$

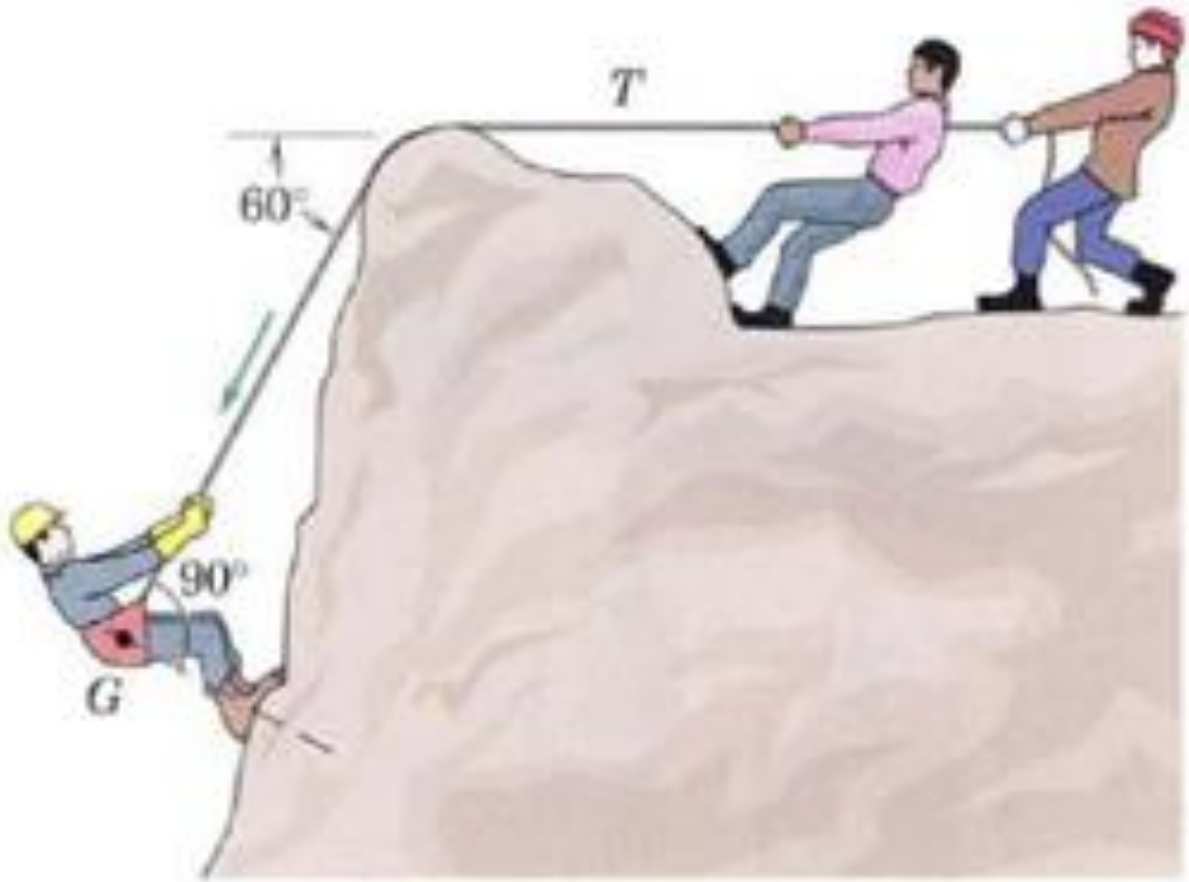

have to produce in the direction shown in order to gain freedom? The coefficient of friction between the reins and wooden pole is 0.70.

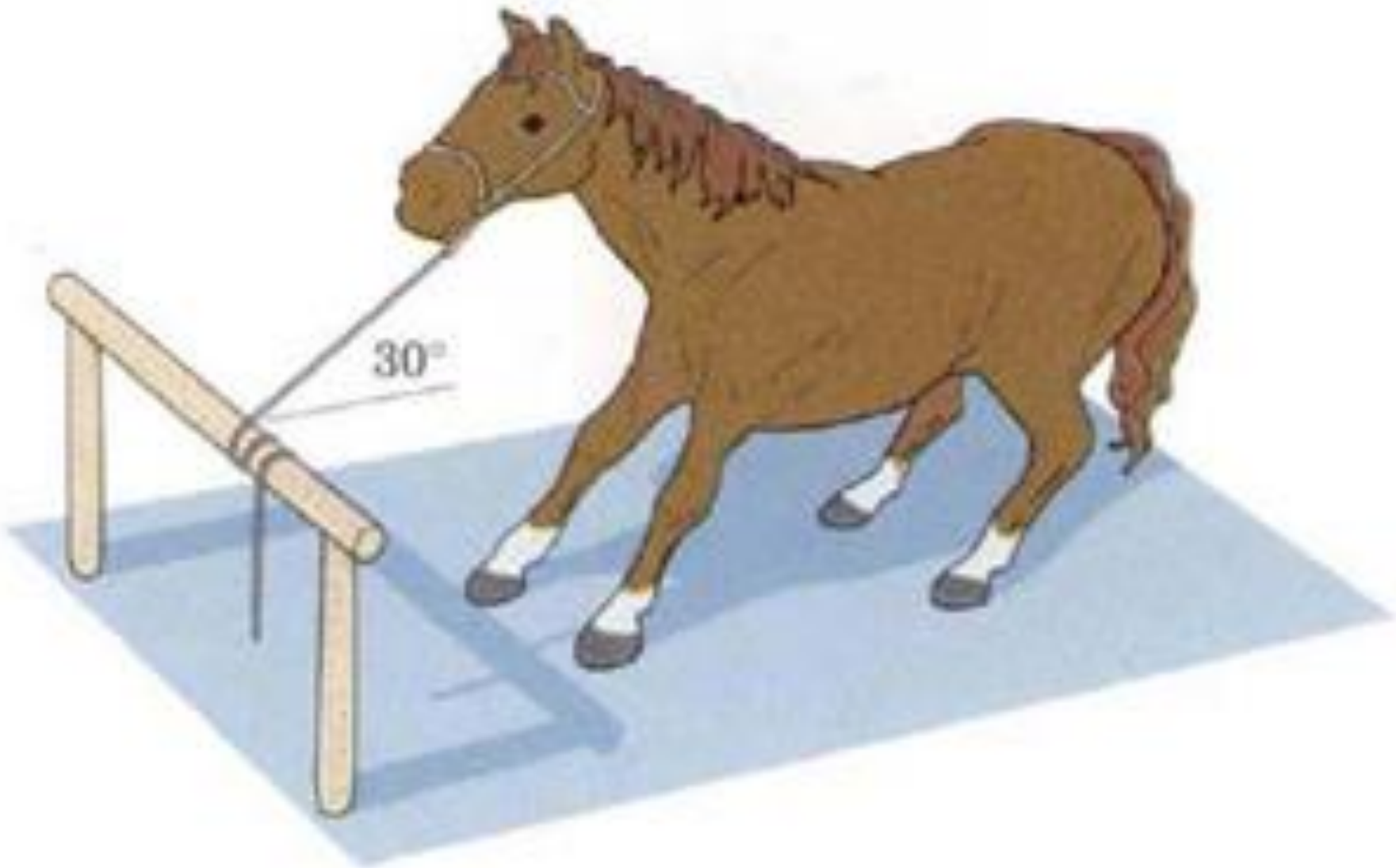

A garden hose with a mass of 1.2 kg/m is in full contact with the ground from B to C. What is the horizontal component P_x of the force which the gardener must exert in order to pull the hose around the small cylindrical guard at B? The coefficient of friction between the hose and the ground is 0.50, and that between the hose and the cylinder is 0.40. Assume that the hose does not touch the ground between A and B.

Ans. $P_x = 55.2$ N

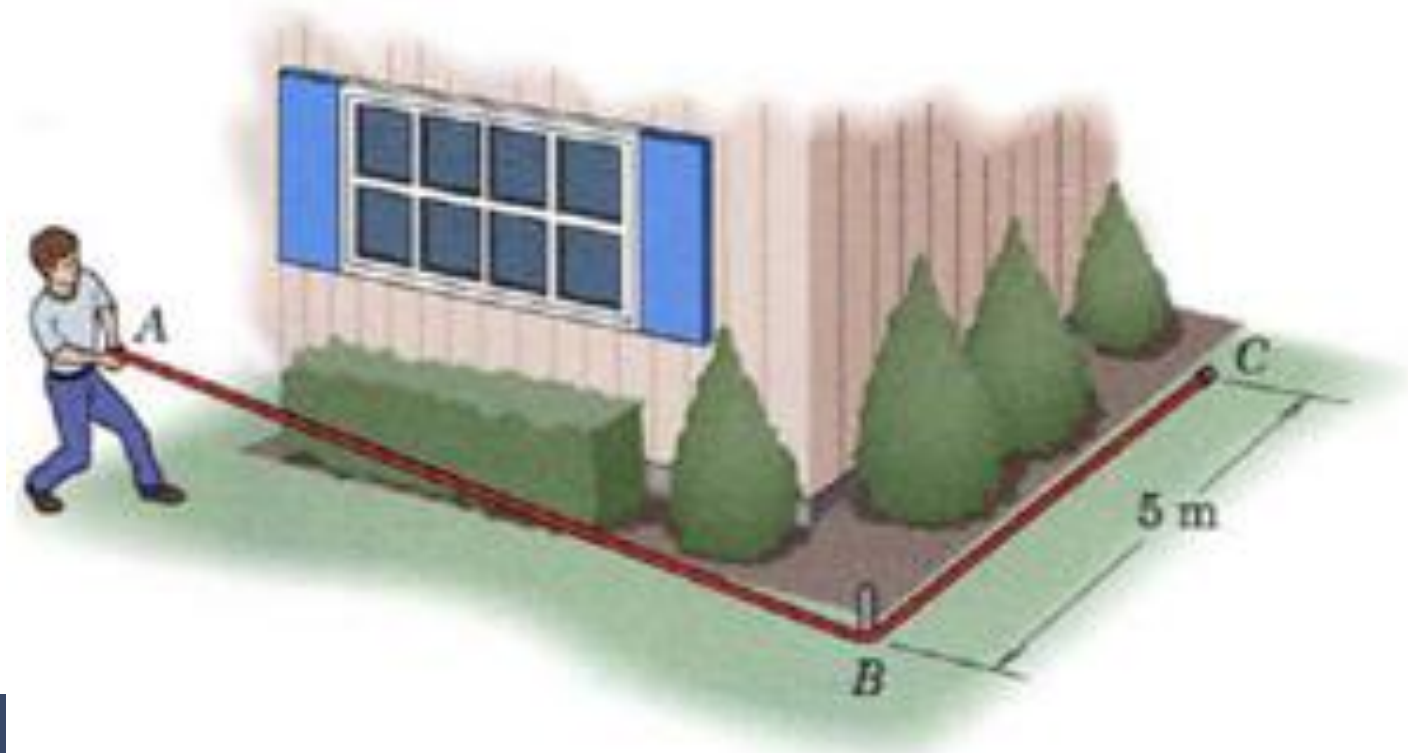

Determine the range of cylinder mass m for which the system is in equilibrium. The coefficient of friction between the 50-kg block and the incline is 0.15 and that between the cord and cylindrical support is 0.25.

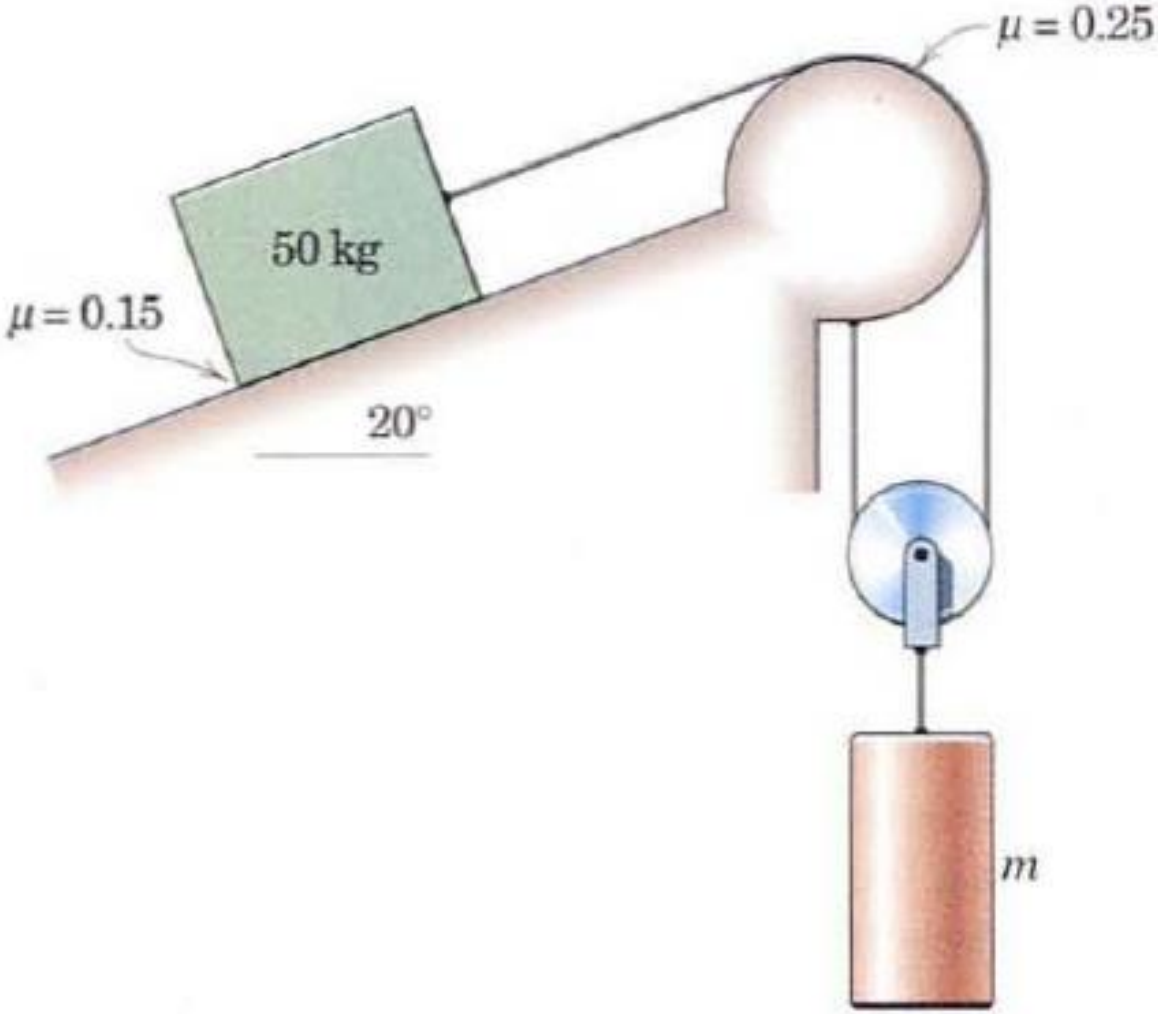

Knowing that the coefficient of static friction is 0.30 between the rope and the horizontal pipe and that the smallest value of P for which equilibrium is maintained is 20 N, determine (a) the largest value of P for which equilibrium is maintained, (b) the coefficient of static friction between the rope and the vertical pipe.

Calculate the horizontal force P required to raise the 100-kg load. The coefficient of friction between the rope and the fixed bars is 0.40.

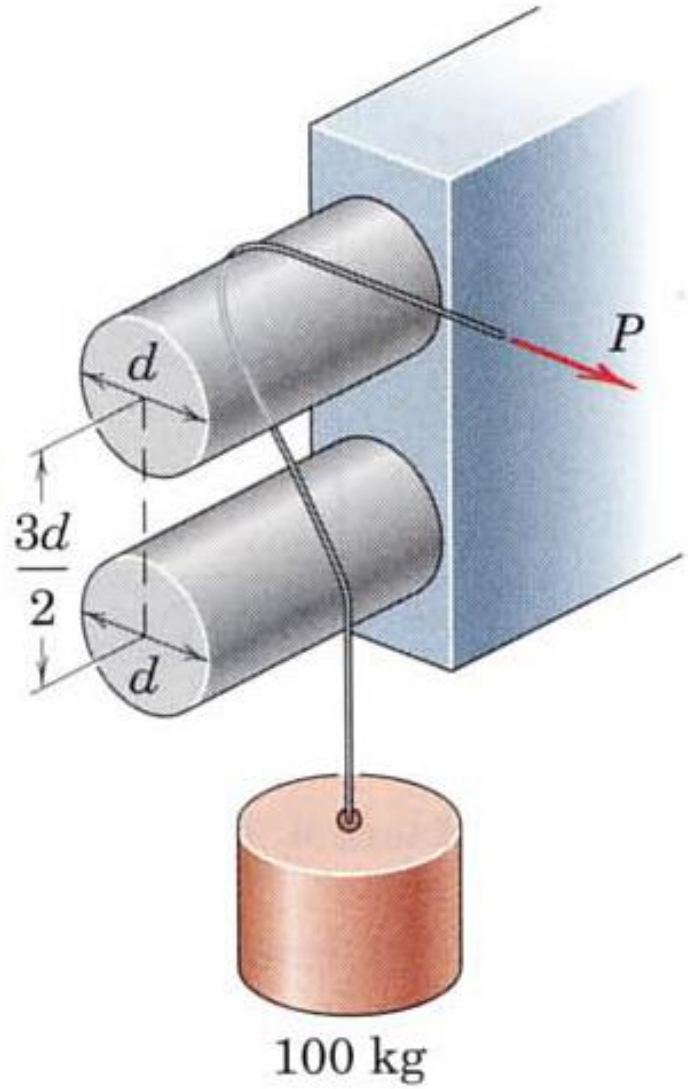

Magnetic tape passes around the light idler pulleys B and over the fixed circular recording head A with a constant speed. The tape tension is unchanged as it passes around the idler pulleys. Calculate the minimum spacing a in the design of this unit for which the ratio of the tensions T_1 and T_2 will not exceed 1.15. The coefficient of friction between the tape and the head is 0.10.

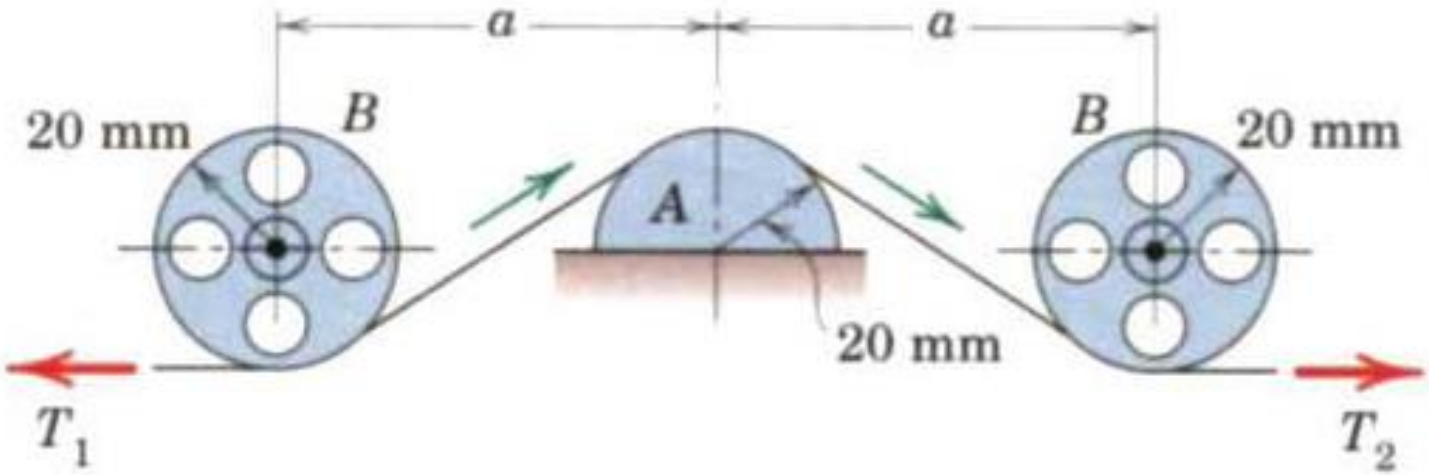
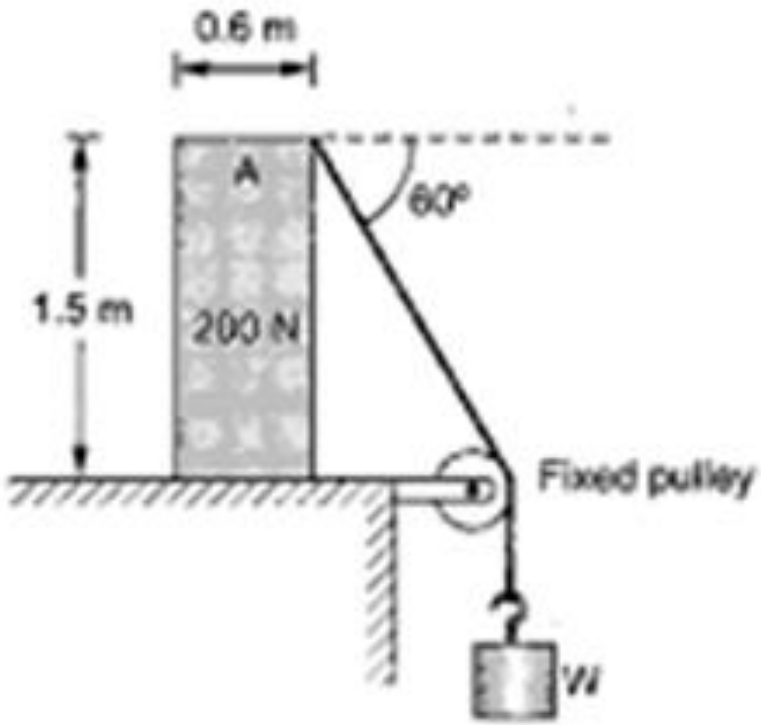
Block A weighing 200 N is connected to another block B of weight W by a cord passing over a rough fixed pulley as shown in Fig. Weight W is slowly increased. Find its value for which motion impends. Take $\mu = 0.2$ for all contacting surfaces.